Traud Electric 100kw Natural Gas

CUMMINS / GGHH 100

Power Generation

Cummins Crosspoint, LLC.

CORPORATE OFFICE
2601 Fortune Circle East Drive
Suite 300 C
Indianapolis, IN 46266
(317) 243-7979 (P)
(317) 240-1925 (F)

CHARLESTON BRANCH
602 New Goff Mt. Road
Cross Lanes, WV 25313
(304) 769-1012 (P)
(304) 769-1022 (F)

ELKHART BRANCH
5125 Beck Drive
Suite B
Elkhart, IN 46516
(574) 523-1500 (P)
(574) 295-8000 (F)

EVANSVILLE BRANCH
7901 Highway 41 North
Evansville, IN 47725
(812) 867-4400 (P)
(812) 867-4411 (F)

FAIRMONT BRANCH
119 Middletown Road
White Hall, WV 26554
(304) 367-0196 (P)
(304) 367-1077 (F)

FORT WAYNE BRANCH
3415 Coliseum Blvd. West
Fort Wayne, IN 46808
(260) 482-3691 (P)
(260) 484-8930 (F)

HAZARD BRANCH
1868 S KY Hwy 15
Hazard, KY 41702
(606) 436-5718 (P)
(606) 436-5048 (F)

INDIANAPOLIS BRANCH
3661 W. Morris Street
Indianapolis, IN 46242
(317) 486-5287 (P)
(317) 240-1215 (F)

KNOXVILLE BRANCH
1211 Ault Road
Knoxville, TN 37914
(865) 523-0446 (P)
(865) 523-0343 (F)

LOUISVILLE BRANCH
9820 Bluegrass Pkwy.
Louisville, KY 40299
(502) 495-0677 (P)
(502) 499-7499 (F)

NASHVILLE BRANCH
706 Spence Lane
Nashville, TN 37217
(615) 366-4341 (P)
(615) 366-5693 (F)

NORMAL BRANCH
450 W. Northtown Road
Normal, IL 61761
(309) 452-4454 (P)
(309) 452-1642 (F)

Cummins Crosspoint, LLC.

Power Systems
9820 Bluegrass Parkway
Louisville, KY 40299
(502) 495-0677
Fax: (502) 499-7499

Traud Electric 100kw Natural Gas

For assistance, questions or concerns on any material contained within this submittal packet contact one of the following people:

Jason Schneider	Phone	(502)-495-0677 x 8038
Area Sales Manager	Cell	(502)-648-8575
Cummins Crosspoint, LLC.	Fax	(502)-499-7499
9820 Bluegrass Pkwy.		
Louisville, KY 40299		

Jason Folz	Phone	(502)-495-0677 x 8034
Area Sales Manager	Cell	(502)-594-4200
Cummins Crosspoint, LLC	Fax	(502)-499-7499
9820 Bluegrass Parkway		
Louisville, KY 40299		

NOTICE

A COPY OF THIS GENERATOR SET SUBMITTAL MUST BE RETURNED TO OUR OFFICE, APPROVED IN ITS ENTIRETY AND BEARING THE DATE OF APPROVAL, STAMP OR SIGNATURE AND TITLE OF THE APPROVING AUTHORITY, BEFORE ANY ITEM WILL BE RELEASED FOR MANUFACTURE OR SHIPMENT. WE ASSUME NO RESPONSIBILITY FOR DELAYS IN OUR FORECASTED SHIPPING SCHEDULES ON ANY ITEM ON WHICH SUBMITTAL APPROVAL IS BEYOND THIRTY (30) DAYS FROM THE SUBMISSION DATE ON THE COVER PAGE.

THIS SUBMITTAL IS BASED UPON OUR INTERPRETATION OF THE PROJECT REQUIREMENTS AND/OR SPECIFICATIONS AND IS IN ACCORDANCE WITH YOUR ORDER AND PRODUCT AVAILABILITY OF FROM OUR VENDORS. PLEASE REVIEW THE ENCLOSED DATA COMPLETELY AND CAREFULLY. SHOULD ADDITIONAL INFORMATION OR CLARIFICATION BE REQUIRED PLEASE FORWARD A SUBMITTAL COPY, COMPLETE WITH YOUR NOTATIONS, TO OUR OFFICE WITHIN THIRTY (30) DAYS FOR A PROMPT RESPONSE AND/OR RESUBMITTAL.

CONSIDERABLE ATTENTION IS GIVEN TO THE PREPARATION OF THIS SUBMITTAL TO ENSURE IT IS COMPLETE, CONCISE AND CORRECT AS IS POSSIBLE. PLEASE REVIEW IT CAREFULLY AND THOROUGHLY.

Power Generation

Certificate of Compliance April 14, 2009

This letter is the certification of compliance with the Federal Acquisition Regulation Section 25 and the ARRA section 1605 detailing Buy America provisions. Based on the clarification documentation issued by the Federal OMB 26 March 2009, FAR Case 2009-008, the below list of products are compliant with the regulations.

All Paralleling Switchgear, Commercial Mobile and Residential product complies.

Diesel Gensets			
10DSKAA	100DSGAA	275DQHAA	750DQFAA
15DSKAB	100DGDB	300DQHAB	800DFHB
20DSKBA	125DGDK	300DQDAC	800DQCC
25DSKCA	125DSHAE	300DQAF	800DQFAB
35DGGD	125DSGAB	300DFCB	900DFHC
35DGBB	150DGFA	350DFCC	900DQFAC
40DGHD	150DSGAC	400DFCE	1000DFHD
40DGBC	175DGFB	350DFEG	1000DQFAD
50DGHE	200DGFC	400DFEB	1100DFLB
50DGCA	230DGFS	400DFEH	1250DFLC
60DGCB	150DSHAA	450DFEC	1250DQGAA
35DSFAA	175DSHAB	450DFEJ	1500DFLE
40DSFAB	200DSHAC	500DFED	1500DQGAB
50DSFAC	230DSHAD	500DFEK	1750DQKB
60DSFAD	250DQDAA	600DFGB	1750DQKAA
80DSFAE	250DQAD	600DQCA	2000DQKC
80DGCG	275DQAE	600DQMAA	2000DQKAB
80DGDA	275DFBF	750DFGE	2250DQKH
100DSHAF	275DQDAB	750DFHA	1800DQKD
		750DQCB	2500DQLC

Spark Ignited Gensets
20GGMA
25GGMB
30GGMC
35GGFD
42GGFE
60GGHE
75GGHF
85GGHG
100GGHH
125GGLA
150GGLB

Transfer Switches	Amps														
OTPC	40	70	125	225	260	300	400	600	800	1000	1200	1600	2000	3000	4000
OTEC	40	70	125	225	260	300	400	600	800	1000					
BTPC	40	70	125	225	260	300	400	600	800	1000	1200	1600	2000	3000	4000
CHPC	40	70	125	225	260	300	400	600	800						
OHPC	40	70	125	225	260	300	400	600	800						
LT	30	60	100	150	200	260									
LC	80	125	250	275	350	500									
OT	40	70	125	225	260	300	400	600	800	1000					

Cummins Power Generation
1400 73rd Avenue NW
Fridley, MN 55443 USA

Our energy working for you.™

Cummins Power Generation

Bill of Materials

Item	Description	Qty
	Spark Ignited Genset: 60Hz-100kW	
100GGHH	Genset-SpkIgn NatGas/Propane,60Hz,100kW-StandbyRtg	1
A331-2	Duty Rating-Standby Power	1
L090-2	Listing-UL 2200	1
L164-2	OSHPD Seismic Cert, Sds=2.28g	1
L156-2	Cert-Seismic, IBC2000,2003,2006,Ss=3.41g.rooftop	1
L155-2	EmissionsCert-SI,EPA,Emergency,Stationary,40CFR60	1
C002-2	Fuel System-Natural Gas	1
F182-2	Enclosure-Steel,Weather Protective,with ExhSys	1
R098-2	Voltage-120/208,3 Phase,Wye,4 Wire	1
B414-2	Alternator-60 Hz, 12 Lead, Upper Broad Range, 125C	1
H643-2	SET CONTROL-PCC 2100	1
B184-2	Exciter/Regulator-Pmg, 3 Phase Sensor	1
A366-2	Engine Governor-Electronic, Isochronous Only	1
KM65-2	Circuit Breaker Mtg-Single Brkr,Left of Control	1
KD26-2	Circuit Breaker-400a,3pole,240v,Thermo-Magnetic,Ul	1
F179-2	Skidbase-Housing Ready	1
A422-2	Engine Starter - 12 VDC Motor	1
A333-2	Battery Charging Alternator-Normal Output	1
E125-2	Engine Cooling-High Ambient Air Temperature	1
H527-2	Warning-Low Coolant Level	1
H036-2	Coolant Heater-120 Volt Ac, Single Phase	1
L028-2	Genset warranty- Base, Standby 2 years / 400 hours	1
F065-2	Rack-Battery	1
start up & test	after installation	1
10 amp	battery charger	1

Spark-ignited generator set 85 – 100 kW standby EPA Emissions

> Specification sheet

Our energy working for you.™

Cummins Power Generation

Description

Cummins Power Generation commercial generator sets are fully integrated power generation systems providing optimum performance, reliability and versatility for stationary standby and prime power applications. Codes or standards compliance may not be available with all model configurations – consult factory for availability.

ISO 9001	This generator set is designed in facilities certified to ISO 9001 and manufactured in facilities certified to ISO 9001 or ISO 9002.
PTS	The Prototype Test Support (PTS) program verifies the performance integrity of the generator set design. Cummins Power Generation products bearing the PTS symbol meet the prototype test requirements of NFPA 110 for Level 1 systems.
CSA	All low voltage models are CSA certified to product class 4215-01.
UL	The generator set is available Listed to UL 2200, Stationary Engine Generator Assemblies. The PowerCommand control is Listed to UL 508 - Category NITW7 for U.S. and Canadian usage.
U.S. EPA	Engine certified to U.S. EPA SI Stationary Emission Regulation 40 CFR, Part 60.

Features

Ford heavy-duty gas engine - Rugged 4-cycle industrial spark-ignited delivers reliable power. The electronic air/fuel ratio control provides optimum engine performance and fast response to load changes.

Three-Way Catalyst – Simultaneously converts NO_x, CO and HC to nitrogen, oxygen, carbon dioxide and water, minimizing the harmful emissions of the genset.

Alternator - Several alternator sizes offer selectable motor starting capability with low reactance 2/3 pitch windings, low waveform distortion with non-linear loads and fault clearing short-circuit capability.

Control system - The PowerCommand® electronic control is standard equipment and provides total genset system integration including automatic remote starting/stopping, precise frequency and voltage regulation, alarm and status message display, AmpSentry™ protection, output metering, auto-shutdown at fault detection and NFPA 110 Level 1 compliance.

Cooling system - Standard cooling package provides reliable running at up to 40 °C (104 °F) ambient temperature.

Enclosures - Optional weather protective and sound attenuated enclosures are available.

NFPA - The genset accepts full rated load in a single step in accordance with NFPA 110 for Level 1 systems.

Warranty and service - Backed by a comprehensive warranty and worldwide distributor network.

	Natural gas				Propane					
	Standby rating		Prime rating		Standby rating		Prime rating		Data sheets	
Model	60 Hz kW (kVA)	50 Hz kW (kVA)	60 Hz kW (kVA)	50 Hz kW (kVA)	60 Hz kW (kVA)	50 Hz kW (kVA)	60 Hz kW (kVA)	50 Hz kW (kVA)	60 Hz	50 Hz
GGHG	85 (106)				85 (106)				D-3384	
GGHH	100 (125)	75 (94)			100 (125)	75 (94)			D-3385	D-3387

©2011 Cummins Power Generation Inc. All rights reserved. Cummins Power Generation and Cummins are registered trademarks of Cummins Inc. PowerCommand, AmpSentry, InPower and "Our energy working for you." are trademarks of Cummins Power Generation. Other company, product or service names may be trademarks or service marks of others. Specifications are subject to change without notice.
S-1607a (6/11)

Generator set specifications

Governor regulation class	ISO 8528 Part 1 Class G3
Voltage regulation, no load to full load	± 1.0%
Random voltage variation	± 1.0%
Frequency regulation	Isochronous
Random frequency variation	GGHH ± 0.5%, GGHG ± 0.33%
Radio frequency emissions compliance	Meets requirements of most industrial and commercial applications

Engine specifications

Design	Turbocharged
Bore	90.2 mm (3.55 in)
Stroke	105.9 mm (4.17 in)
Displacement	6.8 L (412.5 in^3)
Cylinder block	Cast iron, V 10 cylinder
Battery capacity	600 amps minimum at ambient temperature of 0 °C (32 °F)
Battery charging alternator	65 amps
Starting voltage	12 volt, negative ground
Lube oil filter type(s)	Single spin-on canister-combination full flow with bypass
Standard cooling system	40 °C (104 °F) ambient radiator

Alternator specifications

Design	Brushless, 4 pole, drip proof revolving field
Stator	2/3 pitch
Rotor	Direct coupled, flexible disc
Insulation system	Class H per NEMA MG1-1.65
Standard temperature rise	150 ºC (302 °F) standby
Exciter type	Torque match (shunt)
Phase rotation	A (U), B (V), C (W)
Alternator cooling	Direct drive centrifugal blower
AC waveform total harmonic distortion	< 5% no load to full linear load, < 3% for any single harmonic
Telephone influence factor (TIF)	< 50 per NEMA MG1-22.43
Telephone harmonic factor (THF)	< 3

Available voltages

60 Hz				50 Hz			
3-phase			1-phase	3-phase			1-phase
• 120/208	• 120/240	• 127/220	• 120/240	• 110/190	• 110/220	• 115/200	• 110/220
• 139/240	• 240/416	• 254/440		• 115/230	• 120/208	• 120/240	• 120/240
• 277/480	• 347/600			• 127/220	• 220/380	• 230/400	
				• 240/416	• 254/440		

Note: Consult factory for other voltages.

Generator set options and accessories

Engine
- ☐ 120/240 V 1500 W coolant heaters

Fuel system
- ☐ Natural gas
- ☐ Natural gas/propane liquid with automatic changeover
- ☐ Natural gas/propane vapor with automatic changeover
- ☐ Propane liquid withdrawal
- ☐ Vapor withdrawal

Alternator
- ☐ 105 °C (221 °F) rise alternator
- ☐ 125 °C (257 °F) rise alternator
- ☐ 150 °C (302 °F) rise alternator
- ☐ 120/240 V, 100 W anti-condensation heater
- ☐ 12 lead, broad range, extended stack (full single phase output)
- ☐ Lower broad range
- ☐ PMG excitation
- ☐ Upper broad range
- ☐ Single phase (4 lead)

Exhaust system
- ☐ Mounted residential muffler

Generator set
- ☐ AC entrance box
- ☐ Battery
- ☐ Battery charger
- ☐ Duct adapter
- ☐ Enclosure: Aluminum, steel, weather protection or sound attenuated
- ☐ Export box packaging
- ☐ Main line circuit breaker
- ☐ Remote annunciator panel
- ☐ UL 2200 Listed
- ☐ 2 year prime power, 6000 hours, warranty
- ☐ 2 year standby warranty
- ☐ 5 year basic power warranty
- ☐ 5 year comprehensive warranty

Note: Some options may not be available on all models - consult factory for availability.

Our energy working for you.™

www.cumminspower.com

©2011 Cummins Power Generation Inc. All rights reserved. Cummins Power Generation and Cummins are registered trademarks of Cummins Inc. PowerCommand, AmpSentry, InPower and "Our energy working for you." are trademarks of Cummins Power Generation. Other company, product or service names may be trademarks or service marks of others. Specifications are subject to change without notice.
S-1607a (6/11)

Power Generation

Control system

PowerCommand PCC2100 - An integrated generator set control system providing isochronous governing, voltage regulation, engine protection and operator interface functions.

- Includes integral AmpSentry protection, which provides a full range of alternator protection functions that are matched to the alternator provided.
- Control function provides battery monitoring and testing features, and smart starting control system.
- Three phase sensing, full wave rectified voltage regulation system, with a PWM output for stable operation with all load types.
- Standard PCCNet interface.
- Suitable for operation in ambient temperatures from -40 °C to +70 °C (-40 °F to +158 °F) and altitudes to 5000 m (13,000 ft).
- Prototype tested; UL, CSA and CE compliant.
- InPower™ PC-based service tool available for detailed diagnostics, setup, data logging and fault simulation.

AmpSentry AC protection

- AmpSentry Protective Relay – UL-listed
- Over current and short-circuit shutdown
- Over current warning
- Single and three phase fault regulation
- Over and under voltage shutdown
- Over and under frequency shutdown
- Overload warning with alarm contact
- Reverse power and reverse Var shutdown
- Field Overload

Engine protection

- Overspeed shutdown
- Low oil pressure warning and shutdown
- High coolant temperature warning and shutdown
- High oil temperature warning (optional)
- Low coolant level warning or shutdown
- Low coolant temperature warning
- High and low battery voltage warning
- Weak battery warning
- Dead battery shutdown
- Fail to start (overcrank) shutdown
- Fail to crank shutdown
- Redundant start disconnect
- Cranking lockout
- Sensor failure indication

Operator interface

- Off/manual/auto mode switch
- Manual run/stop switch
- Panel lamp/test switch
- Emergency stop switch
- Alpha-numeric display with pushbutton access, for viewing engine and alternator data and providing setup, controls and adjustments
- LED lamps indicating genset running, not in auto, common warning, common shutdown
- (5) configurable LED lamps
- LED bargraph AC data display (optional)

Alternator data

- Line-to-line and line-to-neutral AC volts
- Three phase AC current
- Frequency
- Total and individual phase kW and kVA

Engine Data

- DC voltage
- Lube oil pressure
- Coolant temperature
- Lube oil temperature (optional)

Other data

- Genset model data
- Start attempts, starts, running hours
- KW hours (total and since reset)
- Fault history
- Load profile (hours less than 30% and hours more than 90% load)
- System data display (optional with network and other PowerCommand gensets or transfer switches)

Governing

- Integrated digital electronic isochronous governor
- Temperature dynamic governing
- Smart idle speed mode
- Glow plug control (some models)

Voltage regulation

- Integrated digital electronic voltage regulator
- Three phase line-to-neutral sensing
- Configurable torque matching
- PMG (optional)

Control functions

- Data logging on faults
- Fault simulation (requires InPower)
- Time delay start and cooldown
- Cycle cranking
- (3) configurable customer inputs
- (3) configurable customer outputs

Options

- ☐ Analog AC Meter Display
- ☐ Thermostatically Controlled Space Heater
- ☐ Key-type mode switch
- ☐ Ground fault module
- ☐ Auxiliary relays (3)
- ☐ Echelon LonWorks interface
- ☐ Modlon Gateway to convert to Modbus (loose)
- ☐ PowerCommand iWatch web server for remote monitoring and alarm notification (loose)
- ☐ PCCNet and Lonworks Digital input and output module(s) and Remote annunciators (loose)

PowerCommand 2100 control operator/display panel

Our energy working for you.™

www.cumminspower.com

©2011 Cummins Power Generation Inc. All rights reserved. Cummins Power Generation and Cummins are registered trademarks of Cummins Inc. PowerCommand, AmpSentry, InPower and "Our energy working for you." are trademarks of Cummins Power Generation. Other company, product or service names may be trademarks or service marks of others. Specifications are subject to change without notice.
S-1607a (6/11)

Power Generation

Ratings definitions

Emergency standby power (ESP):

Applicable for supplying power to varying electrical load for the duration of power interruption of a reliable utility source. Emergency Standby Power (ESP) is in accordance with ISO 8528. Fuel Stop power in accordance with ISO 3046, AS 2789, DIN 6271 and BS 5514.

Limited-time running power (LTP):

Applicable for supplying power to a constant electrical load for limited hours. Limited Time Running Power (LTP) is in accordance with ISO 8528.

Prime power (PRP):

Applicable for supplying power to varying electrical load for unlimited hours. Prime Power (PRP) is in accordance with ISO 8528. Ten percent overload capability is available in accordance with ISO 3046, AS 2789, DIN 6271 and BS 5514.

Base load (continuous) power (COP):

Applicable for supplying power continuously to a constant electrical load for unlimited hours. Continuous Power (COP) in accordance with ISO 8528, ISO 3046, AS 2789, DIN 6271 and BS 5514.

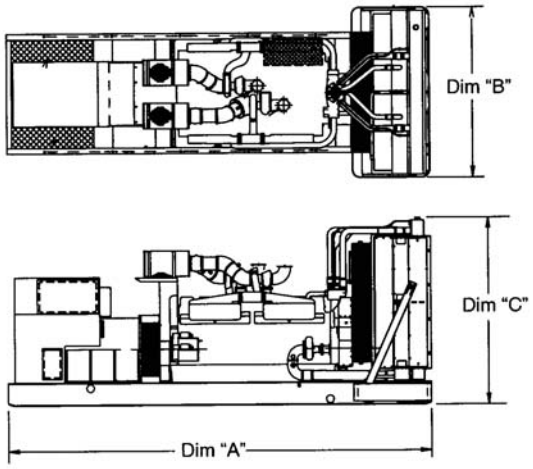

This outline drawing is for reference only. See respective model data sheet for specific model outline drawing number.

Do not use for installation design

Model	Dim "A" mm (in.)	Dim "B" mm (in.)	Dim "C" mm (in.)	Set Weight* dry kg (lbs)	Set Weight* wet kg (lbs)
GGHG	2662 (104.8)	1016 (40.0)	1397 (55.0)	1071 (2362)	1111 (2450)
GGHH	2662 (104.8)	1016 (40.0)	1397 (55.0)	1093 (2410)	1133 (2498)

* Weights represent a set with standard features. See outline drawings for weights of other configurations.

Cummins Power Generation
1400 73rd Avenue N.E.
Minneapolis, MN 55432 USA
Telephone: 763 574 5000
Fax: 763 574 5298

Warning: Back feed to a utility system can cause electrocution and/or property damage. Do not connect to any building's electrical system except through an approved device or after building main switch is open.

Our energy working for you.™

www.cumminspower.com

©2011 Cummins Power Generation Inc. All rights reserved. Cummins Power Generation and Cummins are registered trademarks of Cummins Inc. PowerCommand, AmpSentry, InPower and "Our energy working for you." are trademarks of Cummins Power Generation. Other company, product or service names may be trademarks or service marks of others. Specifications are subject to change without notice.
S-1607a (6/11)

Power Generation

Model: GGHH
KW rating: 100 natural gas standby
100 propane standby
Frequency: 60
Fuel type: Natural gas/propane

EPA Emissions

➤ Generator set data sheet

Our energy working for you.™

Cummins Power Generation

Exhaust emission data sheet:	EDS-327
Exhaust emission compliance sheet:	
Sound performance data sheet:	MSP-185
Cooling performance data sheet:	
Prototype test summary data sheet:	PTS-147
Standard set-mounted radiator cooling outline:	0500-3485

Fuel consumption

	Natural gas								Propane							
	Standby kW (kVA)				Prime kW (kVA)				Standby kW (kVA)				Prime kW (kVA)			
Ratings	100 (125)								100 (125)							
Load	1/4	1/2	3/4	Full	1/4	1/2	3/4	Full	1/4	1/2	3/4	Full	1/4	1/2	3/4	Full
scfh	406	618	848	1090					178	272	367	467				
m^3/hr	11.5	17.5	24	30.9					5.1	7.7	10.4	13.2				

Engine

	Natural gas		Propane	
	Standby rating	Prime rating	Standby rating	Prime rating
Engine model	WSG-1068			
Configuration	Cast iron, V 10 cylinder			
Aspiration	Turbocharged			
Gross engine power output, kWm (bhp)	131.3 (176.0)		122.3 (164.0)	
BMEP at rated load, kPa (psi)	1158.3 (168.0)		1158.3 (168.0)	
Bore, mm (in)	90.2 (3.55)		90.2 (3.55)	
Stroke, mm (in)	105.9 (4.17)		105.9 (4.17)	
Rated speed, rpm	1800		1800	
Piston speed, m/s (ft/min)	6.4 (1250.0)		6.4 (1250.0)	
Compression ratio	9.0:1		9.0:1	
Lube oil capacity, L (qt)	6.1 (6.5)		6.1 (6.5)	
Overspeed limit, rpm	2400 ± 50		2400 ± 50	
Regenerative power, kW	16.00		16.00	

Fuel flow

Minimum operating pressure, kPa (in H_2O)	1.7 (7.0)		1.7 (7.0)	
Maximum operating pressure, kPa (in H_2O)	3.4 (13.6)		3.4 (13.6)	

©2011 Cummins Power Generation Inc. All rights reserved. Cummins Power Generation and Cummins are registered trademarks of Cummins Inc. "Our energy working for you." is a trademark of Cummins Power Generation. Specifications are subject to change without notice.

Air

	Natural gas		Propane	
	Standby rating	Prime rating	Standby rating	Prime rating
Combustion air, m^3/min (scfm)	6.3 (222.0)		5.8 (204.0)	
Maximum air cleaner restriction, kPa (in H_2O)	1.2 (5.0)		1.2 (5.0)	
Alternator cooling air, m^3/min (scfm)	37.0 (1308.0)		37.0 (1308.0)	

Exhaust

Exhaust flow at rated load, m^3/min (cfm)	19.4 (687.0)		17.9 (633.0)	
Exhaust temperature, °C (°F)	573 (1063)		555 (1031)	
Maximum back pressure, kPa (in H_2O)	6.2 (25.0)		6.2 (25.0)	
Available back pressure for additional sound attenuation and piping, kPa (in H_2O)	2.5 (10.0)		2.5 (10.0)	

Standard set-mounted radiator cooling

Ambient design, °C (°F)	40 (104)		40 (104)	
Fan load, kW (HP)	7.3 (9.8)		7.3 (9.8)	
Coolant capacity (with radiator), L (US gal)	33.1 (8.8)		33.0 (8.8)	
Coolant system air flow, m^3/min (scfm)	193.1 (6825.0)		193.1 (6825.0)	
Total heat rejection, MJ/min (Btu/min)	9.3 (8740.0)		9.3 (8740.0)	
Maximum cooling air flow static restriction, kPa (in H_2O)	124.5 (0.5)		124.5 (0.5)	

Weights[2]

Unit dry weight kgs (lbs)	1093 (2410)
Unit wet weight kgs (lbs)	1133 (2498)

Notes:
[1] For non-standard remote installations contact your local Cummins Power Generation representative.
[2] Weights represent a set with standard features. See outline drawing for weights of other configurations.

©2011 Cummins Power Generation Inc. All rights reserved. Cummins Power Generation and Cummins are registered trademarks of Cummins Inc. "Our energy working for you." is a trademark of Cummins Power Generation. Specifications are subject to change without notice.
D-3385d (4/11)

Alternator data

Natural gas three phase table[1]		105 °C	105 °C	105 °C	105 °C	125 °C	125 °C	125 °C	125 °C	150 °C	150 °C	150 °C
Feature code		B418	B415	B268	B304	B417	B414	B267	B303	B416	B413	B419
Alternator data sheet		208	208	210	207	207	207	209	207	206	207	206
Voltage ranges		110/190 thru 120/208 220/380 thru 240/416	120/208 thru 139/240 240/416 thru 277/480	120/208 thru 139/240 240/416 thru 277/480	347/600	110/190 thru 120/208 220/380 thru 240/416	120/208 thru 139/240 240/416 thru 277/480	120/208 thru 139/240 240/416 thru 277/480	347/600	110/190 thru 120/208 220/380 thru 240/416	120/208 thru 139/240 240/416 thru 277/480	347/600
Surge kW		111	111	112	110	109	109	111	110	108	109	109
Motor starting kVA (at 90% sustained voltage)	Shunt	422	422	563	360	360	360	516	360	313	360	313
	PMG	497	497	663	423	423	423	607	423	368	423	368

Full load current amps at standby rating	120/208	127/220	139/240	220/380	240/416	277/480	347/600
	347	328	301	190	173	150	120

Propane three phase table[1]		105 °C	105 °C	105 °C	105 °C	125 °C	125 °C	125 °C	125 °C	150 °C	150 °C	150 °C
Feature code		B418	B415	B268	B304	B417	B414	B267	B303	B416	B413	B419
Alternator data sheet		208	208	210	207	207	207	209	207	206	207	206
Voltage ranges		110/190 thru 120/208 220/380 thru 240/416	120/208 thru 139/240 240/416 thru 277/480	120/208 thru 139/240 240/416 thru 277/480	347/600	110/190 thru 120/208 220/380 thru 240/416	120/208 thru 139/240 240/416 thru 277/480	120/208 thru 139/240 240/416 thru 277/480	347/600	110/190 thru 120/208 220/380 thru 240/416	120/208 thru 139/240 240/416 thru 277/480	347/600
Surge kW		104	104	104	103	102	102	104	103	101	102	102
Motor starting kVA (at 90% sustained voltage)	Shunt	422	422	563	360	360	360	516	360	313	360	313
	PMG	497	497	663	423	423	423	607	423	368	423	368

Full load current amps at standby rating	120/208	127/220	139/240	220/380	240/416	277/480	347/600
	347	328	301	190	173	150	120

Natural gas single phase table		105 °C	105 °C	105 °C	105 °C	125 °C	125 °C	125 °C	125 °C			
Feature code		B418	B415	B274	B268	B417	B414	B273	B267			
Alternator data sheet number		208	208	209	210	207	207	208	209			
Voltage ranges		120/240[2]	120/240[2]	120/240[3]	120/240[3]	120/240[2]	120/240[2]	120/240[3]	120/240[3]			
Surge kW		108	108	110	109	106	106	109	108			
Motor starting kVA (at 90% sustained voltage)	Shunt	250	250	305	330	215	215	250	305			
	PMG	290	290	360	385	250	250	290	360			

Full load current amps at standby rating	120/240[2]	120/240[3]
	278	417

Propane Single phase table		105 °C	105 °C	105 °C	105 °C	125 °C	125 °C	125 °C	125 °C			
Feature code		B418	B415	B274	B268	B417	B414	B273	B267			
Alternator data sheet number		208	208	209	210	207	207	208	209			
Voltage ranges		120/240[2]	120/240[2]	120/240[3]	120/240[3]	120/240[2]	120/240[2]	120/240[3]	120/240[3]			
Surge kW		101	101	103	102	100	100	102	101			
Motor starting kVA (at 90% sustained voltage)	Shunt	250	250	305	330	215	215	250	305			
	PMG	290	290	360	385	250	250	290	360			

Full load current amps at standby rating	120/240[2]	120/240[3]
	278	417

Notes:

[1] Single phase power can be taken from a three phase generator set at up to 2/3 set rated 3-phase kW at 1.0 power factor. Also see Note 3 below.
[2] The broad range alternators can supply single phase output up to 2/3 set rated 3-phase kW at 1.0 power factor.
[3] The extended stack (full single phase output) and 4 lead alternators can supply single phase output up to full set rated 3-phase kW at 1.0 power factor.

Our energy working for you.™

www.cumminspower.com

©2011 Cummins Power Generation Inc. All rights reserved. Cummins Power Generation and Cummins are registered trademarks of Cummins Inc. "Our energy working for you." is a trademark of Cummins Power Generation. Specifications are subject to change without notice.
D-3385d (4/11)

Cummins Power Generation

Derating factors

Natural gas

Standby/prime Three phase	Engine power available up to 594 m (1950 ft) at ambient temperatures up to 40 °C (104 °F). Altitude derate - 4% per 305 m (1000 ft) above 594 m (1950 ft). Temperature derate - 2% per 11 °C (1% per 10 °F) above 40 °C (104 °F).
Standby/prime Full single phase output	Engine power available up to 594 m (1950 ft) at ambient temperatures up to 30 °C (86 °F). Altitude derate - 4% per 305 m (1000 ft) above 594 m (1950 ft). Temperature derate - 4% per 10 °C (2% per 10 °F) above 30 °C (86 °F).

Propane

Standby/prime	Engine power available up to 305 m (1000 ft) at ambient temperatures up to 25 °C (77 °F). Altitude derate - 4% per 305 m (1000 ft) above 305 m (1000 ft). Temperature derate - 2% per 11 °C (1% per 10 °F) above 25 °C (77 °F).

Ratings definitions

Emergency standby power (ESP):	Limited-time running power (LTP):	Prime power (PRP):	Base load (continuous) power (COP):
Applicable for supplying power to varying electrical load for the duration of power interruption of a reliable utility source. Emergency Standby Power (ESP) is in accordance with ISO 8528. Fuel Stop power in accordance with ISO 3046, AS 2789, DIN 6271 and BS 5514.	Applicable for supplying power to a constant electrical load for limited hours. Limited Time Running Power (LTP) is in accordance with ISO 8528.	Applicable for supplying power to varying electrical load for unlimited hours. Prime Power (PRP) is in accordance with ISO 8528. Ten percent overload capability is available in accordance with ISO 3046, AS 2789, DIN 6271 and BS 5514.	Applicable for supplying power continuously to a constant electrical load for unlimited hours. Continuous Power (COP) is in accordance with ISO 8528, ISO 3046, AS 2789, DIN 6271 and BS 5514.

Formulas for calculating full load currents:

Three phase output

$$\frac{\text{kW} \times 1000}{\text{Voltage} \times 1.73 \times 0.8}$$

Single phase output

$$\frac{\text{kW} \times \text{SinglePhaseFactor} \times 1000}{\text{Voltage}}$$

Cummins Power Generation
1400 73rd Avenue N.E.
Minneapolis, MN 55432 USA
Phone: 763 574 5000
Fax: 763 574 5298

Warning: Back feed to a utility system can cause electrocution and/or property damage. Do not connect to any building's electrical system except through an approved device or after building main switch is open.

Our energy working for you.™

www.cumminspower.com

©2011 Cummins Power Generation Inc. All rights reserved. Cummins Power Generation and Cummins are registered trademarks of Cummins Inc. "Our energy working for you." is a trademark of Cummins Power Generation. Specifications are subject to change without notice.
D-3385d (4/11)

PowerCommand® 2100 digital generator set control

> Specification sheet

Our energy working for you.™

Cummins® Power Generation

Description

The PowerCommand® 2100 Control is a microprocessor-based generator set monitoring, metering and control system. The control provides an operator interface to the genset, digital voltage regulation, digital governing and generator set protective functions. The integration of all the functions into a single control system provides enhanced reliability and performance compared to conventional control systems.

The PowerCommand control is designed for mounting on the generator set and is suitable for use on a wide range of generator sets in non-paralleling applications. The PowerCommand Control will directly read AC voltages up to 600 VAC and can be configured for any frequency, voltage and power connection configuration from 120 to 600 VAC.

The control offers a wide range of standard control and digital display features so custom control configurations are not needed to meet application specifications. System reliability is not compromised by use of untested special components.

Power for PowerCommand Control is usually derived from the generator set starting batteries. It functions without degradation in performance over a voltage range from 8 VDC to 35 VDC.

Features

Digital engine speed governing controls - Provide isochronous frequency regulation (optional on some genset models).

Digital voltage regulation – 3-phase sensing.

AmpSentry™ protective relay – UL Listed, true alternator over current protection.

Analog and digital AC output metering.

Battery monitoring system - Senses and warns against a weak battery condition.

Digital alarm and status message display.

Generator set monitoring - Displays status of all critical engine and alternator functions.

Smart starting control system - Temperature dynamic integrated fuel ramping to limit black smoke and frequency overshoot, in addition to optimized cold weather starting.

PCCNet Interface - A proprietary RS485 network interface to allow easy plug and play interface to remote annunciators, relay modules for extensible I/O and other devices.

Advanced serviceability - Interfaces to InPower™, a PC-based software service tool. A version of InPower is available for customer use.

PowerCommand LonWorks® network (optional) - Provides interfaces to external devices through a twisted pair wire and other media.

Certifications - Suitable for use on generator sets that are designed, manufactured, tested, and certified to relevant UL, NFPA, ISO, IEC, and CSA standards.

Warranty and service - Backed by a comprehensive warranty and worldwide distributor service network.

©2008 | Cummins Power Generation Inc. | All rights reserved | Specifications subject to change without notice | Cummins Power Generation and Cummins are registered trademarks of Cummins Inc. PowerCommand, InPower, AmpSentry and "Our energy working for you." are trademarks of Cummins Power Generation. Other company, product, or service names may be trademarks or service marks of others.

Operator panel

The operator panel provides the user with a complete package of easy to view and use information. Connections to the operator panel are locking plug interfaces for reliable, vibration-resistant interconnection to the generator set wiring harness.

Control switches and functions

Off/manual/auto mode control switch - The *not in auto* lamp will flash when the control is in the *manual* or *off* mode. In the *auto* mode, the generator set can be started with a start signal from a remote device, such as an automatic transfer switch.

Manual run/stop control switch - When the mode control switch is in the *manual* position and the *manual/run/stop* switch is pressed, the generator set will start, bypassing time delay start. The control is configurable to include an idle period on manual start. If the generator set is running in the *manual* mode, pressing the *run/stop* switch will cause the generator set to shut down after a cool down at idle period.

Panel lamp/lamp test control switch - Depressing the *panel lamp* switch will cause the panel illumination to operate for approximately 10 minutes. Pressing and holding the switch will sequentially illuminate all LED lamps on the panel to confirm proper operation of these components.

Fault acknowledge/reset switch - The control includes a *fault acknowledge* function to allow the operator to reset the fault condition. If the fault condition is not corrected, the fault will reappear, but will not be logged as a separate event. Multiple faults can be logged and displayed at one time.

Emergency stop control switch - Pressing the *emergency stop* switch will cause the generator set to immediately shut down. The generator set is prevented from running or cranking with the switch pressed in.

Operator adjustments - The control includes provisions for many set up and adjustment functions via raise/lower switches on the operator panel. Functions that can be adjusted by the operator include:

- Time delay start (0-300 seconds)
- Time delay stop (0-600 seconds)
- Alternator voltage (±5%)
- Alternator frequency (±5%)

Indicating lamps

The operator panel includes a series of LED indicating lamps to allow the operator to view the general status of the generator set. Functions displayed include:

Green lamps to indicate generator set running (operating at rated voltage and frequency); remote start signal received.

Red (flashing) lamp to indicate not-in-auto mode and a red lamp to indicate common shutdown.

Amber lamp for common warning.

Lamps (5) are configurable for color and function. These lamps are configured with InPower for any condition monitored by the control. Default configuration for these lamps include the following functions:

- Low oil pressure warning
- High engine temperature warning
- Low oil pressure shutdown
- Over speed shutdown
- Fail to start

Analog AC metering panel (optional)

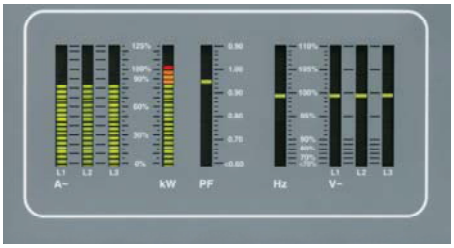

The PowerCommand control can be equipped with an analog AC metering panel that simultaneously displays 3-phase line-to-line AC volts and current, kW, power factor, and frequency.

The meter panel is composed of a series of LEDs configured in bar graphs for each function. The LEDs are color coded, with green indicating normal range values, amber for warning levels and red for shutdown conditions. Scales for each function are in % of nominal rated values. Resolution is 1% for values close to nominal and increases at values far from nominal.

Alphanumeric display panel

The PowerCommand control is provided with an alphanumeric display capable of displaying 2 lines of data with approximately 20 characters per line. The display is accompanied by a set of six tactile-feel membrane switches that are used by the operator to navigate through

©2008 | Cummins Power Generation Inc. | All rights reserved | Specifications subject to change without notice | Cummins Power Generation and Cummins are registered trademarks of Cummins Inc. PowerCommand, InPower, AmpSentry and "Our energy working for you." are trademarks of Cummins Power Generation. Other company, product, or service names may be trademarks or service marks of others.

Power Generation

control menus and to make control adjustments. (There are no rotary potentiometers in the control. All adjustments are made via the display panel or InPower). Display is configurable for multiple languages. It is configurable for units of measurement.

All data on the control can be viewed by scrolling through screens with the navigation keys.

The control displays all active fault conditions with the latest displayed first. Active and inactive faults are displayed.

The display panel includes a screen-saver timer that will turn off the display after 30 minutes of inactivity. Touching any key will turn the screen back on.

Generator set hardware data - Generator set rating in kVA, complete generator set model number and provisions for generator set serial number, engine model and serial number, and alternator model and serial number. The control stores the part number of the control and the software version present in the control. This information is read using InPower.

Data logs - Number of start attempts and number of start attempts since reset. Number of times generator set has run and duration of generator set running time. Generator set kWh produced. The control also stores number of start attempts, operating hours and kW hours since each has been reset. This data is read with InPower.

Adjustment history - Provides a record of adjustment and setting changes made on the control and identifies whether adjustment was made via the operator panel or with a service tool. If a service tool is used, the control provides a record of the serial number of the tool used. This information is read with InPower.

Fault history - Provides a record of the most recent fault conditions with time stamp, along with the number of times each fault has occurred. Up to 20 events are stored in the control non-volatile memory.

Load profile data - Control logs data indicating the operating hours at percent of rated kW load in 10% increments. The data is presented on the operator panel based on total operating hours on the generator set based on number of hours under 30% load and number of hours at more than 90% of rated. InPower can be used to read data in detail (10% increments).

Generator set output voltage - All phases, line-to-line and line-to-neutral, accuracy 1%. Data for all phases is displayed simultaneously to allow viewing of voltage balance.

Generator set output current - All phases, accuracy 1%. Data for all phases is displayed simultaneously to allow viewing of load balance.

Generator set output frequency.

Generator set power output - PowerCommand displays generator set kW and kVA output (average and individual phase and direction of flow), and power factor with leading/lagging indication. Accuracy 5%.

Generator set kWh power output - Displays total kilowatt-hours produced by the generator set and total produced since last reset, with time stamp of time of last reset.

Generator set control temperature.

Engine starting battery voltage.

Engine lube oil pressure.

Engine coolant temperature.

Engine lube oil temperature (option on some genset models).

System data display - The generator set will exchange data with Cummins Power Generation transfer switches utilizing PowerCommand transfer controls and other generator sets using the PowerCommand 2100 control that are located on the same site and interconnected using a PowerCommand network. Information displayed from each transfer switch in the system includes: transfer switch name (assigned by customer at site), kW load (when fitted with load monitoring equipment), sources available, source connected and if any alarm conditions are present on the switch. Genset data includes genset name, kW load, status and name of any alarm conditions that are present.

Service adjustments - The operator panel includes provisions for adjustment and set up of all control functions in the generator set. The operator panel includes an access code that is used to protect the control from unauthorized service level adjustments.

Internal control functions

Engine control

Remote start mode - PowerCommand accepts a ground signal from remote devices or a network signal to automatically start the generator set and immediately accelerate to rated speed and voltage.

PowerCommand includes a smart starting system that is designed to quickly start the engine, minimize black smoke, minimize voltage and frequency overshoot, and oscillations on starting. The control system does this by careful control of the engine fuel system and alternator excitation system.

The control can incorporate a time delay start and a warm-up period at idle speed. See *Engine governing* for details.

Sleep mode - PowerCommand can be configured to include a sleep mode. When enabled, and when the mode select switch is in the off position, the control will revert to

©2008 | Cummins Power Generation Inc. | All rights reserved | Specifications subject to change without notice | Cummins Power Generation and Cummins are registered trademarks of Cummins Inc. PowerCommand, InPower, AmpSentry and "Our energy working for you." are trademarks of Cummins Power Generation. Other company, product, or service names may be trademarks or service marks of others.

Power Generation

a low power consumption mode until a control switch on the operator panel is operated (reset, panel lamp, manual run or emergency stop).

Data logging - The control maintains a record of manual control operations, warning and shutdown conditions, and other events. The control also stores critical engine and alternator data before and after a fault occurs, for use by InPower and the technician in evaluating the root causes for the fault condition.

Fault simulation mode - PowerCommand, in conjunction with InPower software, will accept commands to allow a technician to verify the proper operation of all protective functions of the control by simulating failure modes or by forcing the control to operate outside of its normal operating ranges.

Engine starting - The control system automatically controls the engine starter and provides proper engine fueling and alternator control to provide fast and efficient starting.

Cycle cranking - Configurable for number of starting cycles (1 to 7) and duration of crank and rest periods. Control includes starter protection algorithms to prevent the operator from specifying a starting sequence that might be damaging.

Time delay start and stop (cool down) - Configurable for time delay of 0-300 seconds prior to starting after receiving a remote start signal; and for time delay of 0-600 seconds prior to ramp-to-idle or shutdown after signal to stop in normal operation modes. Default for both time delay periods is 0 seconds.

Engine governing

The PowerCommand control includes integrated digital governing capability to directly drive an engine fuel control valve. Features of the governing system (when enabled) include:

Isochronous governing - Controls engine speed within ±0.25% for any steady state load from no load to full load. Frequency drift will not exceed ±0.5% for a 33 °C (60 °F) change in ambient temperature over an 8 hour period.

Temperature dynamics - Modifies the engine fuel system (governing) control parameters as a function of engine temperature. Allows engine to be more responsive when warm and more stable when operating at lower temperature levels.

Smart idle mode - Engine governing can be regulated at an idle speed for a programmed period on automatic stop of the engine or in manual mode. In an automatic mode, the control will bypass the idle period if the engine is at a low load level for sufficient duration for cool down. During idle mode engine protective functions are adjusted for the lower engine speed, and alternator function and protections are disabled.

Idle speed can be initiated by the operator when the generator set is running in the manual mode.

Glow plug control (optional) - Modifies the engine start cycle to include a programmed time period for operation of glow plugs. This feature is available on generator sets that require glow plug control only.

Alternator control

PowerCommand includes an integrated 3-phase line-to-neutral sensing voltage regulation system that is compatible with either shunt or PMG type excitation systems (some generator set models are always PMG). The voltage regulation system is full wave rectified and has a PWM output for good motor starting capability and stability when powering non-linear loads. Major system features include:

Digital output voltage regulation - PowerCommand will regulate output voltage to within 0.5% for any loads between no load and full load. Voltage drift will not exceed ±0.5% for a 33 °C (60 °F) change in temperature in an 8 hour period. On engine starting, or sudden load acceptance, voltage is controlled to a maximum of 5% overshoot over nominal level.

Torque-matched V/Hz overload control - The voltage roll-off set point and rate of decay (i.e., the slope of the V/Hz curve) is adjustable in the control.

Fault current regulation - PowerCommand will regulate the output current on any phase to a maximum of 3 times rated current under fault conditions for both single phase and three phase faults. The regulation system will drive a permanent magnet generator (PMG) to provide 3 times rated current on all phases for motor starting and short circuit coordination purposes.

Protective functions

On a warning condition the control will indicate a fault by lighting the warning LED on the control panel and displaying the fault name and code on the operator display panel. The nature of the fault and time of occurrence are logged in the control. The service manual and InPower service tool provide service keys and procedures based on the service codes provided.

On a shutdown condition, the control will light the shutdown LED on the control panel, display the fault name and code, initiate shutdown and lock out the generator set. The control maintains a data log of all fault conditions as they occur and time stamps them with the controller run time and engine operating hours data. Adjustments to most set points are made using the InPower service tool.

The control system includes a *"fault bypass"* mode that may be enabled by a service technician. The fault bypass mode forces the system to function regardless of the status of protective functions. (Each function must be individually bypassed.) In this mode the only protective functions that are operational are over speed, loss of speed sensor, moving the control switch to the off position or pressing the emergency stop switch. The control maintains a record of the time that the mode is enabled,

©2008 | Cummins Power Generation Inc. | All rights reserved | Specifications subject to change without notice | Cummins Power Generation and Cummins are registered trademarks of Cummins Inc. PowerCommand, InPower, AmpSentry and "Our energy working for you." are trademarks of Cummins Power Generation. Other company, product, or service names may be trademarks or service marks of others.

Power Generation

and all warning or shutdown conditions that have occurred while in the *"fault bypass"* mode.

The control system automatically captures the generator set logged parameters on a fault condition.

Many protective functions within the control system are configurable for warning, shutdown or both (2 levels). Exceptions to this include functions such as over speed conditions and loss of speed sensing. In addition, some functions can incorporate control functions as a consequence of a fault.

System protective functions:

Ground fault warning (optional) - 600 VAC class generator sets with solid ground. Ground fault sensing is adjustable over a range of 100-1200 amps with time delays of 0-1 second. May be configured for shutdown rather than alarm.

Configurable alarm and status inputs - PowerCommand will accept up to four alarm or status inputs (configurable contact closed to ground or open) to indicate customer-specified conditions. The control is programmable for warning, shutdown or status indication, and for labeling the input. Eight additional faults can be input to the control via the network.

Emergency stop - Annunciated whenever the local or remote emergency stop signal is received. Alarm panel distinguishes between local or remote operation.

Engine protection

Over speed shutdown - Default setting is 115% of nominal.

Low lube oil pressure shutdown - Level is preset to match the capabilities of each engine. Control includes time delays to prevent nuisance shutdown signals.

Low lube oil pressure warning - Level is preset to match the capabilities of each engine. Control includes time delays to prevent nuisance shutdown signals.

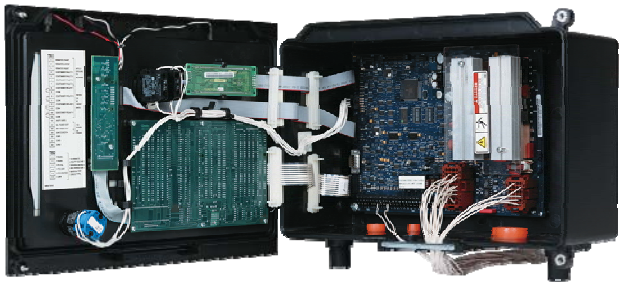

High coolant temperature shutdown - Level is preset to match the capabilities of each engine. Control includes time delays to prevent nuisance shutdown signals.

High coolant temperature warning - Level is preset to match the capabilities of each engine. Control includes time delays to prevent nuisance shutdown signals.

High oil temperature warning (optional) - Level is preset to match the capabilities of each engine. Control includes time delays to prevent nuisance shutdown signals.

Low coolant level warning/shutdown - Optional on some genset models.

Low coolant temperature warning - Indicates that engine temperature may not be high enough for a 10-second start or proper load pickup.

Low and high battery voltage warning - Indicates battery charging system failure by continuously monitoring battery voltage.

Weak battery warning - The control system will test the battery bank each time the generator set is signaled to start, and indicate a warning if the generator set battery indicates impending failure.

Dead battery shutdown - Indicates that generator set failed to start due to failed starting battery.

Fail to start (overcrank) shutdown.

Fail to crank shutdown - Control has signaled starter to crank engine but engine does not rotate.

Redundant starter disconnect.

Cranking lockout - The control will not allow the starter to attempt to engage or to crank the engine when the engine is rotating.

Sensor failure indication - All analog sensors are provided with sensor failure logic to indicate if the sensor or interconnecting wiring has failed. Separate indication is provided for fail high or low.

AmpSentry protective relay

AmpSentry protective relay is a UL Listed comprehensive monitoring and control system integral to the PowerCommand Control System that guards the electrical integrity of the alternator and power system by providing protection against a wide array of fault conditions in the generator set or in the load. It also provides single and three phase fault current regulation so that downstream protective devices have the maximum current available to quickly clear fault conditions without subjecting the alternator to potentially catastrophic failure conditions. See document R1053 below for a full size time over current curve.

Over current warning - Output current on any phase at more than 110% of rating for more than 60 seconds or more than 400% for more than 1 second.

Over current shutdown (51) - Output current on any phase is more than 110%, less than 175% of rating and approaching thermal damage point of alternator. Control includes algorithms to protect alternator from repeated over current conditions over a short period of time.

©2008 | Cummins Power Generation Inc. | All rights reserved | Specifications subject to change without notice | Cummins Power Generation and Cummins are registered trademarks of Cummins Inc. PowerCommand, InPower, AmpSentry and "Our energy working for you." are trademarks of Cummins Power Generation. Other company, product, or service names may be trademarks or service marks of others.

Power Generation

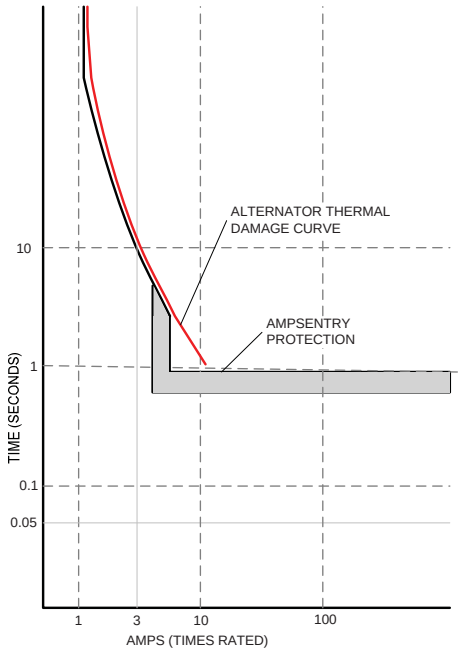

Short circuit shutdown - Output current on any phase is more than 110%, more than 175% of rating, and approaching thermal damage point of alternator. Control includes algorithms to protect alternator from repeated over current conditions over a short period of time.

High AC voltage shutdown (59) - Output voltage on any phase exceeds preset values. Time to trip is inversely proportional to amount above threshold. Values adjustable from 105-125% of nominal voltage with time delay adjustable from 0.25-10 seconds. Default value is 110% for 10 seconds.

Low AC voltage shutdown (27) - Voltage on any phase has dropped below a preset value. Adjustable over a range of 50-95% of reference voltage, time delay 2-10 seconds. Default value is 85% for 10 seconds. Function tracks reference voltage.

Under frequency shutdown (81u) - Generator set output frequency cannot be maintained. Settings are adjustable from 0-10 Hz below nominal governor set point for a 0-20 second time delay. Default: 6 Hz, 10 seconds.

Over frequency shutdown/warning (81o) - Adjustable for operation in a range of 0-10 Hz above nominal frequency, with a time delay of 0-20 seconds. Defaults: Disabled.

Over load (kW) warning - Provides a warning indication when engine is operating at a load level over a set point or due to under frequency. Adjustment range: 50-140% of rated kW, 0-120 second delay. Defaults: 105%, 60 seconds.

Reverse power shutdown (32) - Adjustment range: 5-20% of standby kW rating, delay 1-15 seconds. Defaults: 10%, 3 seconds.

Reverse Var shutdown - Shutdown level is adjustable: threshold 0.15-0.50 per unit, delay 10-60 seconds. Defaults: 0.20, 10 seconds.

Excitation fault - Shutdown of generator set will occur on loss of voltage sensing inputs to control.

Environment

The control is designed for proper operation without recalibration in ambient temperatures from -40 °C to +70 °C (-40 °F to +158 °F), and for storage from 55 °C to +80 °C (-67 °F to +176 °F). Control will operate with humidity up to 95%, non-condensing. Control operation is not restricted by altitude.

The control system is housed in a NEMA 3R/IP53 enclosure. The operator control panel has a single membrane surface which is impervious to the effects of dust, moisture, oil and exhaust fumes. The panel uses sealed membrane or oil-tight switches to provide long reliable service life in harsh environments.

The control system is specifically designed and tested for resistance to RFI/EMI and to resist the effects of vibration to provide a long reliable life when mounted on a generator set. The control includes transient voltage surge suppression to provide compliance to referenced standards.

Control interface

Input signals to the PowerCommand control include:

Remote start signal - May be connected via either discrete signal or Lon™ Network, or both.

Remote emergency stop.

Remote alarm reset.

Configurable customer inputs - Control includes (4) input signals from customer discrete devices that are configurable for warning, shutdown or status indication, as well as message displayed.

Output signals from the control include four configurable relay drivers. Defaults for these are:

Generator set common warning signal - Operates when unit set is running under alarm conditions.

Generator set common shutdown signal.

©2008 | Cummins Power Generation Inc. | All rights reserved | Specifications subject to change without notice | Cummins Power Generation and Cummins are registered trademarks of Cummins Inc. PowerCommand, InPower, AmpSentry and "Our energy working for you." are trademarks of Cummins Power Generation. Other company, product, or service names may be trademarks or service marks of others.

Power Generation

Not in auto - Indicates that the mode control switch is not in the *auto* position or that the genset is shutdown under a fault condition.

Ready to load (generator set running) signal - Operates when the generator set has reached 90% of rated speed and voltage and latches until generator set is switched to *off* or *idle* mode.

Control power for auxiliary devices is available from the controller.

Network connections include:

PCCNet interface - A proprietary dedicated RS485 network for use in operating remote annunciator panels and remote I/O modules.

Serial interface - This communication port is to allow the control to communicate with a personal computer running InPower software.

Echelon® LonWorks® interface (optional).

Software

InPower - A PC-based software service tool that is designed to directly communicate to PowerCommand generator sets and transfer switches to facilitate service and monitoring of these products.

PowerCommand for Windows® - A software tool that is used primarily by operators to remotely monitor and control generator sets, transfer switches and other on-site power system devices.

Warranty

PowerCommand control systems are a part of complete power systems provided by Cummins Power Generation, and are covered by a one-year limited warranty as a standard feature.

Extended warranty options are available for coverage up to 10 years.

Certifications

PowerCommand meets or exceeds the requirements of the following codes and standards:

NFPA110: For Level 1 systems
UL508: Recognized or Listed and suitable for use on UL 2200 Listed generator sets
CSA C282-M1999: Compliance
CSA 22.2: No. 14 M91 Industrial Controls
ISO 8528-4: 1993 compliance, Controls and Switchgear
NFPA99: Standard for Health Care Facilities
CE Mark: Control system suitable for use on generator sets to be CE-marked
EN 50081-2: Industrial Emissions
EN 50082-2: Industrial Susceptibility
ISO 7637, pulses #2b, 4: DC Supply Surge Voltage Test
Mil Std 202C, Method 101: Salt Fog Test
ANSI C62.41: Surge Withstand
IEC 801.2, 3, 4, 5: For Susceptibility, Conducted and Radiated Electromagnetic Emissions.
ISO9001: PowerCommand control systems and generator sets are designed and manufactured in ISO9001 certified facilities.

Options and accessories

- ❑ Analog AC metering display - Provides a bar graph display of 3-phase AC volts and amps, kW, power factor and frequency.
- ❑ Key-type mode select switch - Replaces off/manual/auto switch with a key-type switch.
- ❑ Ground fault alarm module - Installs a separate ground fault indication relay and harness into a control customer input.
- ❑ Exhaust temperature monitoring.
- ❑ Digital remote annunciator.
- ❑ Digital output relay module - Provides (3) relays, each with 2 normally open and 2 normally closed contacts rated 10 A at 600 VAC, 5 A at 24 VDC. Functions of the relays are configurable.
- ❑ Engine oil temperature indication - Some genset models incorporate this feature as standard. On all models, the control may be configured to include an oil temperature warning or shutdown when oil temperature sensing is provided.
- ❑ CAN engine interface (optional on some models). Allows the genset control to directly monitor an engine control module.
- ❑ LON interface.
- ❑ Input/output expansion module – Provides up to 16 configurable Form-C relays, 12 configurable discrete inputs and 8 analog inputs.

Our energy working for you.™

www.cumminspower.com

©2008 | Cummins Power Generation Inc. | All rights reserved | Specifications subject to change without notice | Cummins Power Generation and Cummins are registered trademarks of Cummins Inc. PowerCommand, InPower, AmpSentry and "Our energy working for you." are trademarks of Cummins Power Generation. Other company, product, or service names may be trademarks or service marks of others.

Power Generation

See your distributor for more information

Cummins Power Generation

Americas
1400 73rd Avenue N.E.
Minneapolis, MN 55432 USA
Phone: 763 574 5000
Fax: 763 574 5298

Europe, CIS, Middle East and Africa
Manston Park Columbus Ave.
Manston Ramsgate
Kent CT 12 5BF United Kingdom
Phone 44 1843 255000
Fax 44 1843 255902

Asia Pacific
10 Toh Guan Road #07-01
TT International Tradepark
Singapore 608838
Phone 65 6417 2388
Fax 65 6417 2399

Warning: Back feed to a utility system can cause electrocution and/or property damage. Do not connect to any building electrical except through an approved device or after building main breaker is open.

©2008 | Cummins Power Generation Inc. | All rights reserved | Specifications subject to change without notice | Cummins Power Generation and Cummins are registered trademarks of Cummins Inc. PowerCommand, InPower, AmpSentry and "Our energy working for you." are trademarks of Cummins Power Generation. Other company, product, or service names may be trademarks or service marks of others.
S-1409g (4/08) Page 1 of 8

Cummins Power Generation

ALTERNATOR DATA SHEET

Frame Size: UC3D

CHARACTERISTICS

WEIGHTS:	Wound Stator Assembly	265 lb	120 kg
	Rotor Assembly	317 lb	144 kg
	Complete Alternator	941 lb	427 kg

EXCITATION CURRENT: Full Load 2 Amps No Load 0.5 Amps

INSULATION SYSTEM: Class H Throughout **MAXIMUM SPEED:** 2250 rpm

1 Ø RATINGS (1.0 power factor) (Based on specified temperature rise at 40°C ambient temperature)		**60 Hz**			**50 Hz**	
		Double Delta	4 Lead		Double Delta	
		120/240	120/240		110-120 220-240	
125°C Rise Ratings	kW/kVA	79 / 79	90 / 90		68 /68	
105°C Rise Ratings	kW/kVA	72 / 72	81 / 81		60 /60	

3 Ø RATINGS (0.8 power factor) (Based on specified temperature rise at 40°C ambient temperature)		Upper Broad Range		LBR*	347/600	Broad Range		
		120/208 240/416	139/240 277/480	190-208 380-416	347/600	110/190 220/380	120/208 240/415	127/220 254/440
150°C Rise Ratings	kW	110	124	110	124	97	97	92
	kVA	138	155	138	155	121	121	116
125°C Rise Ratings	kW	105	117	105	117	91	91	87
	kVA	131	146	131	146	114	114	109
105°C Rise Ratings	kW	96	105	96	105	80	80	74
	kVA	120	131	120	131	100	100	93
80°C Rise Ratings	kW	80	88	80	88	72	72	67
	kVA	100	110	100	110	90	90	84

3 Ø REACTANCES (per unit, ±10%) (Based on full load at 105°C Rise Rating)							
Synchronous	2.53	2.08	2.00	1.82	2.11	1.77	1.46
Transient	0.21	0.17	0.16	0.16	0.18	0.15	0.12
Subtransient	0.14	0.12	0.12	0.12	0.13	0.11	0.09
Negative Sequence	0.17	0.14	0.14	0.14	0.14	0.11	0.09
Zero Sequence	0.10	0.08	0.08	0.08	0.08	0.07	0.06

3 Ø MOTOR STARTING						
Maximum kVA (90% Sustained Voltage)	(Shunt)	360	360	360	244	
	(PMG)	423	423	423	306	

TIME CONSTANTS (Sec)					
Transient	0.030	0.030	0.030	0.030	
Subtransient	0.010	0.010	0.010	0.010	
Open circuit	0.820	0.820	0.820	0.820	
DC	0.007	0.007	0.007	0.007	

WINDINGS (@ 20°C)					
Stator Resistance (Line to Line, Ohms)	0.0900	0.0680	0.1250	0.0900	
Rotor Resistance (Ohms)	1.2000	1.2000	1.2000	1.2000	
Number of Leads	12	12	6	12	

* Lower broad range 110/190 thru 120/208, 220/380 thru 240/416.

Prototype Test Supported Emergency/Standby Generator Sets Certification

Cummins Power Generation certifies that its commercial generator sets bearing the Prototype Test Supported (PTS) seal have been subjected to a design and development process that includes extensive prototype testing and evaluation. A PTS production model is engineered and manufactured according to documentation developed through comprehensive research, design and design verification.

Design verification is based on tests of preproduction prototype models manufactured specifically for prototype test purposes and not sold as new equipment. To be certified as a PTS model, the generator set must satisfy these prerequisites:

DESIGN - The PTS certified generator set must be designed specifically for emergency/standby applications that require high reliability and rapid response.

PROTOYPE TESTING - Design suitability of the PTS certified generator set must be proven by tests on preproduction prototype models. The prototype test program is intended to:

1. Confirm the engine and generator have reserve capacity beyond rating to minimize the potential of damage or shutdown during steady state or transient loading conditions, including momentary overloads.

2. Demonstrate generator set, controls and accessories capability to perform reliably and compatibly in service during disturbances common in actual load circuits.

3. Verify the integrity of the generator and excitation system insulation systems and electrical components to withstand heating under rated load and transient overcurrent conditions.

4. Evaluate generator set mechanical and electrical strength to perform without damage during abnormal operating conditions, such as short circuits or out-of-phase paralleling. While operating at rated load, the generator set must be subjected to several 3-phase short circuits of 20 second duration. After the tests, the generator set is inspected to verify that no electrical or mechanical damage was incurred by any components.

5. Determine by endurance testing that no resonance conditions exist in the generator set or accessories that will cause premature failure of components on production units.

6. Investigate and identify failure modes to minimize the risk of any single component failure or human error that could lead to lack of essential electrical supply.

7. Provide a margin of safety, by actual trials, between the generator set component design and protection systems so that the components are not damaged before the protective devices activate a shutdown.

DOCUMENTATION AND SOFTWARE - The PTS certified generator set must be documented in a single drawing package with all components identified with Cummins Power Generation part numbers. A PTS test certificate must be created for each PTS generator set certifying the PTS testing performed.

QUALITY ASSURANCE - Engineering drawings, specifications and test requirements for a PTS certified generator set must be classified by components and assembly quality characteristics. A component and process inspection and test plan must be developed and maintained to measure product conformance to documentation requirements.

PRODUCTION MODEL TESTING - PTS certified generator sets must be subjected to complete production tests that demonstrate conformance to specifications at all rated conditions, including start-up, full load pickup and a performance run at full rated load and power factor.

PROTOTYPE TEST SUPPORT (PTS)
60 HZ TEST SUMMARY

GENERATOR SET MODELS	REPRESENTATIVE PROTOTYPE	
85GGHG	Model:	100GGHH
100GGHH	Engine:	WSG-1068
	Alternator:	UC3D

The following summarizes prototype testing conducted on the designated representative prototype of the specified models. This testing is conducted to verify the complete generator set electrical and mechanical design integrity. Prototype testing is conducted only on generator sets not sold as new equipment.

Maximum Surge Power: 110 KW

The generator set was evaluated to determine the stated maximum surge power.

Maximum Motor Starting: 360 KVA

The generator set was tested to simulate motor starting by applying the specified kVA load at low lagging power factor (0.4 or lower). With this load applied, the generator set recovered to a minimum of 90% rated voltage

Torsional Analysis and Testing:

The generator set was tested to verify that the design is not subjected to harmful torsional stresses in excess of 5000psi. A spectrum analysis of the transducer output was conducted over the speed range of 1200 to 2000 RPM.

Cooling System: 40 °C Ambient
0.50 in. H2O restriction

The cooling system was tested to determine ambient temperature and static restriction capabilities. The test was performed at full rated load in elevated ambient temperature under stated static restriction conditions.

Durability:

The generator set was subjected to a minimum 500 hour endurance test operating at variable load up to the standby rating based upon MIL-STD-705 to verify structural soundness and durability of the design.

Electrical and Mechanical Strength:

The generator set was tested to several single phase and three phase faults to verify that the generator can safely withstand the forces associated with short circuit conditions. The generator set was capable of producing full rated output at the conclusion of the testing.

Steady State Performance:

The generator set was tested to verify steady state operating performance was within the specified maximum limits.

Voltage Regulation:	±0.50%
Random Voltage Variation:	±0.50%
Frequency Regulation:	Isochronous
Random Frequency Variation:	±0.50%

Transient Performance:

The generator set was tested with the standard alternator to verify single step loading capability as required by NFPA 110. Verify acceptable Voltage and frequency response on load addition or rejection were evaluated. The following results were recorded for Natural Gas:

Full Load Acceptance:		
Voltage Dip:	39.2	%
Recovery Time:	7.5	Second
Frequency Dip:	15.3	%
Recovery Time:	8.1	Second
Full Load Rejection:		
Voltage Rise:	18.6	%
Recovery Time:	1.0	Second
Frequency Rise:	13.1	%
Recovery Time:	2.5	Second

Harmonic Analysis:
(per MIL-STD-705B, Method 601.4)

	Line to Line		Line to Neutral	
Harmonic	No Load	Full Load	No Load	Full Load
3	0.056	0.184	0.00	0.14
5	0.74	0.79	0.72	0.76
7	0.72	2.05	0.72	2.00
9	0.00	0.03	0.00	0.00
11	0.375	0.64	0.37	0.62
13	0.12	0.53	0.115	0.53
15	0.00	0.00	0.00	0.00

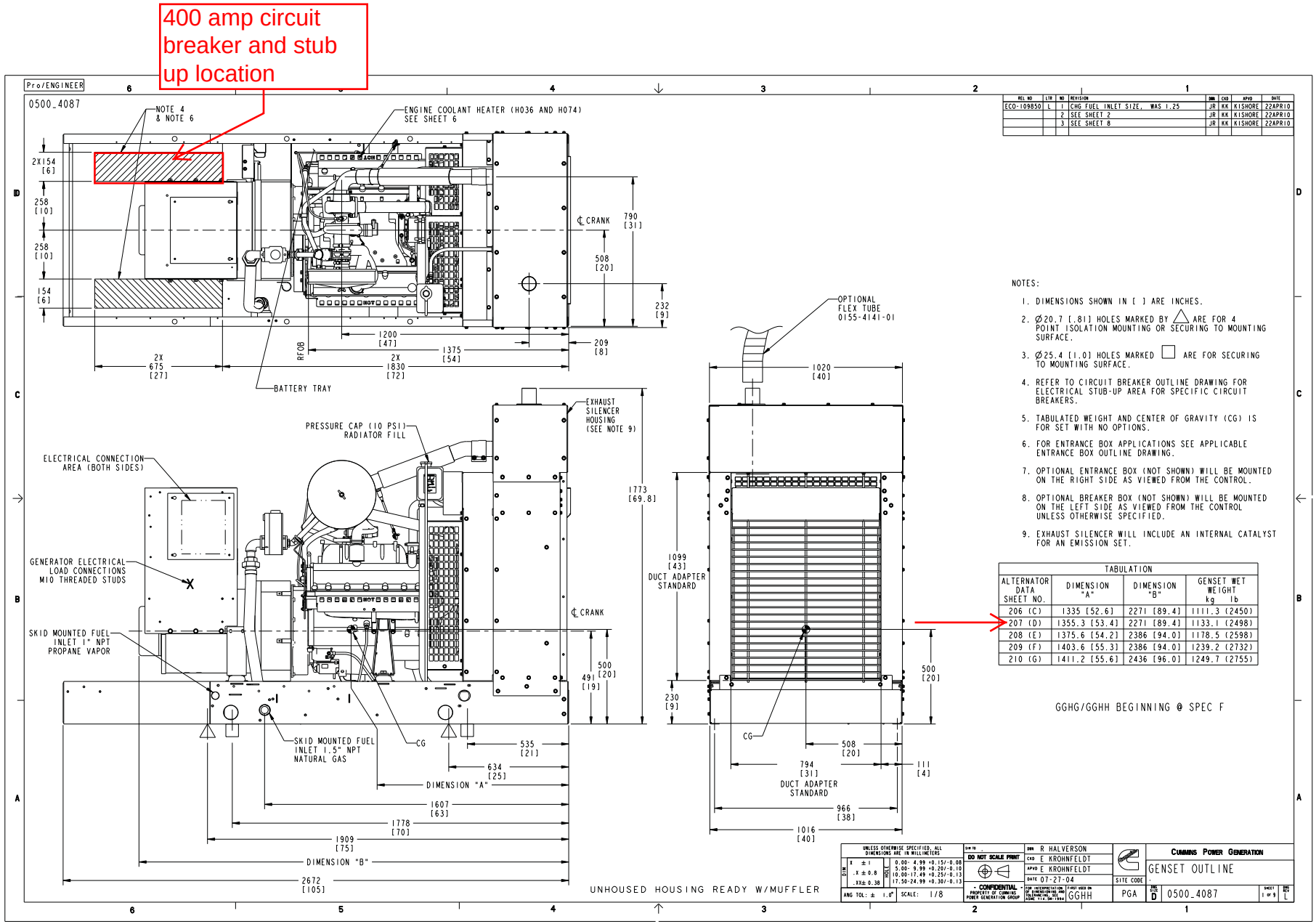

REL NO	LTR	NO	REVISION	DRN	CKD	APVD	DATE
ECO-109850	L	1	CHG FUEL INLET SIZE, WAS 1.25	JR	KK	KISHORE	22APR10
		2	SEE SHEET 2	JR	KK	KISHORE	22APR10
		3	SEE SHEET 8	JR	KK	KISHORE	22APR10

TABULATION

ALTERNATOR DATA SHEET NO.	DIMENSION "A"	DIMENSION "B"	GENSET WET WEIGHT kg lb
206 (C)	1335 [52.6]	2271 [89.4]	1111.3 (2450)
207 (D)	1355.3 [53.4]	2271 [89.4]	1133.1 (2498)
208 (E)	1375.6 [54.2]	2386 [94.0]	1178.5 (2598)
209 (F)	1403.6 [55.3]	2386 [94.0]	1239.2 (2732)
210 (G)	1411.2 [55.6]	2436 [96.0]	1249.7 (2755)

Drawing Name: 0500-4087 Revision: L
Part Name: 0500-4087 Revision: L
Sheet 1 of 10

Pro/ENGINEER

0500_4087

REL NO	LTR	NO	REVISION	DRN	CKD	APVD	DATE
ECO-109850	L	-	CHG FUEL INLET SIZE, WAS 1.25	JR	KK	KISHORE	22APR10

COOLANT
HEATER CONNECTION

NEMA
5-15P

"11P" 120V HEATER (H036)
1500 WATT

OR

"21P" 208/240V HEATER (H074)
1125/1500 WATT

NEMA
6-15P

HEATER SUPPLIED WITH 1219 [48] LONG CORD.

ENGINE
COOLANT HEATER
(H036 & H074)

NATURAL GAS
(C002)

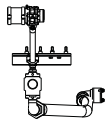

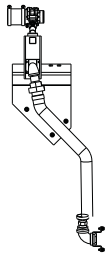

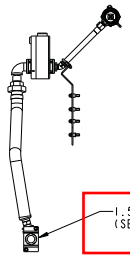

1.5" NPT SKID MOUNTED NATURAL GAS INLET
(SEE SHEET 1 FOR LOCATION DIMENSIONS)

UNLESS OTHERWISE SPECIFIED, ALL DIMENSIONS ARE IN MILLIMETERS

DIM		NOTE
X	± 1	0.00- 4.99 +0.15/-0.08
.X	± 0.8	5.00- 9.99 +0.20/-0.10
.XX	± 0.38	10.00-17.49 +0.25/-0.13
		17.50-24.99 +0.30/-0.13

ANG TOL: ± 1.0° SCALE: 1/8

DIM TO .

DO NOT SCALE PRINT

• CONFIDENTIAL
PROPERTY OF CUMMINS POWER GENERATION GROUP

DRN R HALVERSON
CKD E KROHNFELDT
APVD E KROHNFELDT
DATE 07-27-04

FOR INTERPRETATION OF DIMENSIONS AND TOLERANCING, SEE ASME Y14.5M-1994

FIRST USED ON GGHH

SITE CODE PGA

CUMMINS POWER GENERATION

GENSET OUTLINE

SIZE D | 0500_4087 | SHEET 8 of 9 | REV L

0500_3278	D	Pro/ENGINEER	METRIC DWG

REL NO	LTR	NO	REVISION	ZONE	DR	CHKR	APPROVED	DATE
ECO-106305	P	1	ADD DIMENSION "A" FOR ADS 205	-	SGC	DPA	K.KISHORE	14AUG09

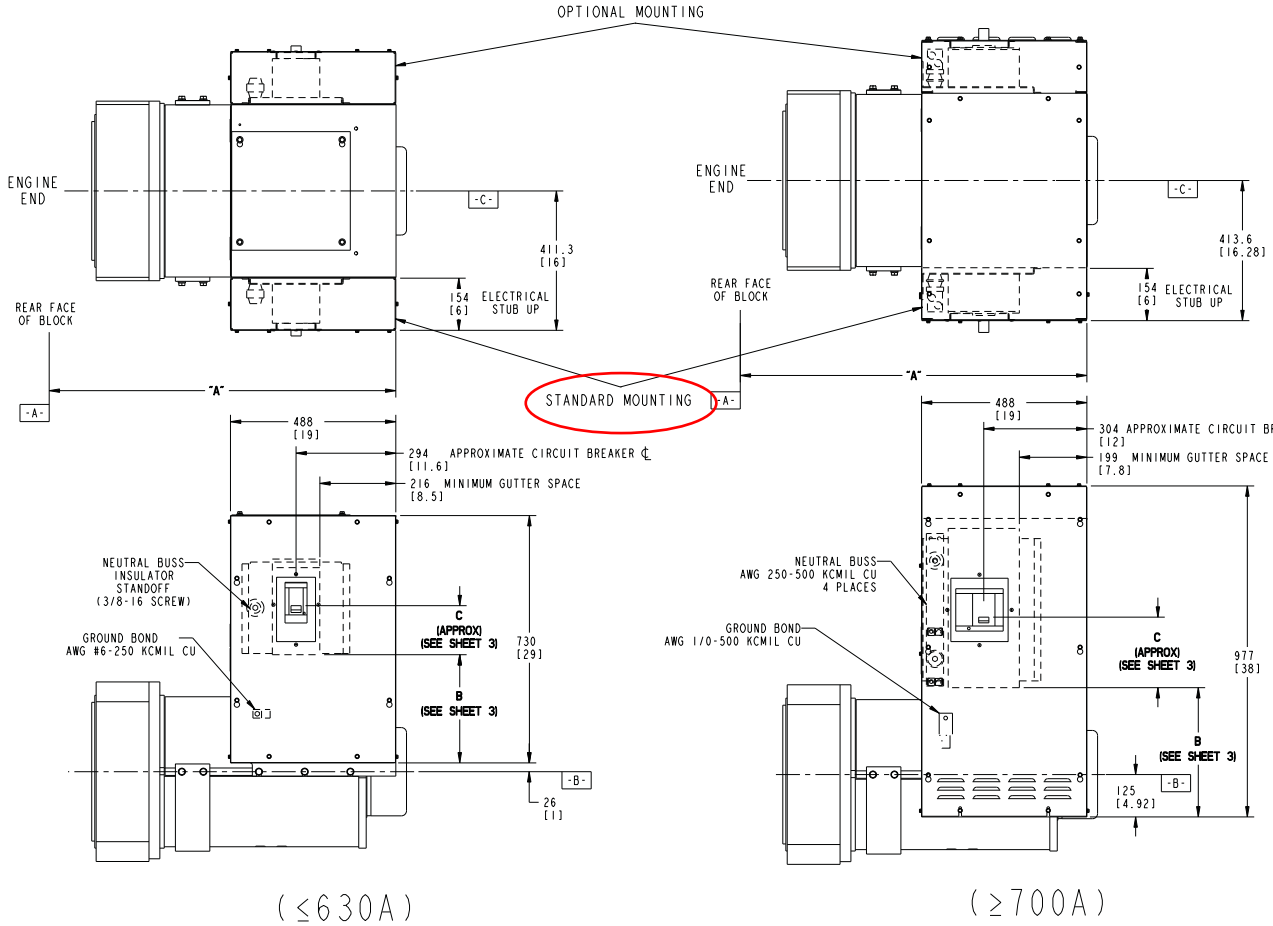

NOTES:

1. DIMENSIONS SHOWN IN [ ] ARE IN INCHES.
2. THESE WIRE-CONDUIT COMBINATIONS MEET NEC AND CEC. TO USE OTHER COMBINATIONS, REFER TO APPLICABLE CODES TO ENSURE THAT WIRE AMPACITY, BEND SPACE AND GUTTER SPACE MEET THE REQUIREMENTS.
3. THESE SHUNT TRIP UNITS CAN BE OPERATED AT 75% OF NOMINAL VOLTAGE AND WILL ACCEPT MOMENTARY OR CONTINUOUS APPLIED VOLTAGE.
4. "NS" SHUNT TRIP HAS NO INTERNAL CONTACTS, IT MUST BE USED IN CONJUNCTION WITH AUXILIARY CONTACTS TO ACCEPT CONTINUOUS APPLIED VOLTAGE. IT CAN OPERATE AT 75% OF NOMINAL VOLTAGE.
5. THE SHUNT TRIP CAN OPERATE AT 70% TO 100% OF NORMAL VOLTAGE AND WILL ACCEPT MOMENTARY OR CONTINUOUS APPLIED VOLTAGE.
6. GGLA, GGLB: DIM B IS 402, DIM C IS 124.
7. 800 AMP BREAKER: A LUG ACCEPTING (2) 3/0-600 kcmil CONDUCTORS IS AVAILABLE THRU ACCESSORIES. PGA PART NUMBER 0332-4278.
8. 1200 AMP BREAKER: A LUG ACCEPTING (3) 3/0-600 kcmil CONDUCTORS IS AVAILABLE THRU ACCESSORIES. PGA PART NUMBER 0332-4279.

TABULATION

ALT. DATA SHEET (ADS)	DIM "A" DGBB DGBC DGCA DGCB DGCG DGGD DGHD DGHE	DGDA DGDB DGDK	DGFA DGFB DGFC	GGFD GGFE	GGHE GGHF GGHG GGHH	GGKB GGKC GGKD	GGLA GGLB
201	809 [31.9]	---	---	759 [29.9]	---	---	
202	809 [31.9]	---	---	759 [29.9]	---	---	
203	898 [35.4]	---	---	852 [33.5]	856 (33.7)	---	
204	898 [35.4]	---	---	852 [33.5]	856 (33.7)	---	
205	944 [37.2]	944 [37.2]	---	---	860 (33.9)	---	
206	907 [35.7]	907 [35.7]	---	---	864 (34.0)	---	
207	907 [35.7]	907 [35.7]	---	---	864 (34.0)	---	---
208	1022 [40.2]	1022 [40.2]	1022 [40.2]	---	979 (38.5)	1022 [40.2]	1030 [40.6]
209	1022 [40.2]	1022 [40.2]	1022 [40.2]	---	979 (38.5)	1022 [40.2]	1030 [40.6]
210	---	1072 [42.2]	1072 [42.2]	---	---	1072 [42.2]	1080 [42.5]
211	---	1112 [43.8]	1112 [43.8]	---	---	1112 [43.8]	1120 [44.1]
212	---	---	1171 [46.1]	---	---	---	---

ITEM	PART NO	NO REQD	DESCRIPTION OR MATERIAL	MT MCS

DO NOT SCALE PRINT

ANG TOL± 1.0

DRAWN TO SCALE OF 5/32

TOLERANCE UNLESS OTHERWISE SPECIFIED

	MM	INCH
X	1	.X
.X	0.8	.XX
.XX	0.38	.XXX
ANG	±1°	±1°

	NAME	DATE
DR	G.COLLEEN	08-17-98
CHKR / MFG	S.JULIK	08-18-98
APPROVED	T.LOEHLEIN	08-18-98

SIZE D

MODEL FIRST USED ON DG__/GG__

SITE CODE PGA

CUMMINS POWER GENERATION
1400 73RD AVE NE
MINNEAPOLIS, MINNESOTA 55432

TITLE OUTLINE-CKT_BRKR .

DWG NO 0500_3278

SHEET 1 OF 3

REV D

0500_3278 | D | Pro/ENGINEER | METRIC DWG

REL NO	LTR	NO	REVISION	ZONE	DR	CHKR	APPROVED	DATE
ECO-106305	P	-	----	-	SGC	DPA	K.KISHORE	14AUG09

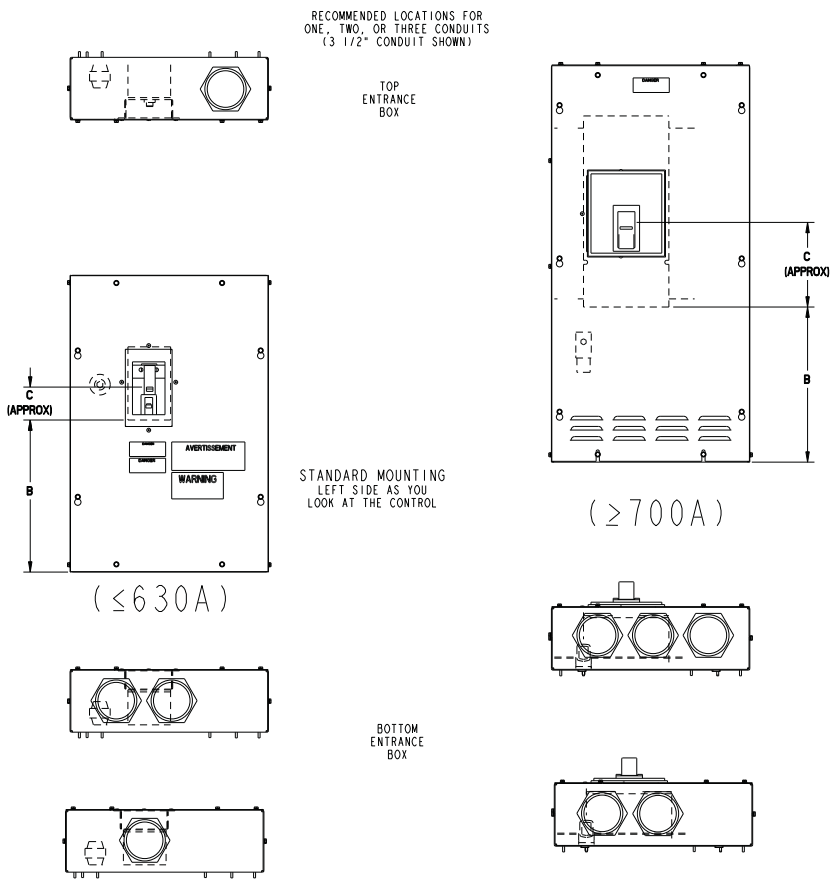

TYPICAL CONDUIT WIRE SIZE BASED ON NEC 2008, ARTICLE 310.15 AT 75C TEMPERATURE RATED CONDUCTOR AT 30C AMBIENT AND ANNEX C (LIQUID TIGHT FLEXIBLE METAL CONDUIT - LFCM)

2

MAX BRKR AMPS	WIRE (COPPER)		CABLE AMPACITY	TOTAL NUMBER OF CONDUITS	
	QTY	SIZE		QTY	SIZE (IN INCHES)
1200	3	500 KCMIL	380	3	3 1/2
1000	3	400 KCMIL	335	3	3
800	3	300 KCMIL	285	2	3
630	2	350 KCMIL	310	2	3
600	2	350 KCMIL	310	2	3
400	1	600 KCMIL	420	1	4
250	1	250 KCMIL	255	1	2 1/2
100	1	2 KCMIL	115	1	2

DO NOT SCALE PRINT

ANG TOL± 1.0

DRAWN TO SCALE OF 5/32

TOLERANCE UNLESS OTHERWISE SPECIFIED

	MM	Inch
DIM	X ± 1 .X ± 0.8 .XX ± 0.38	.X ± .XX ± .XXX±
HOLE	0.09-0.99 +0.15/-0.00 5.00-9.99 +0.20/-0.10 10.00-17.49 +0.25/-0.13 17.50-24.99 +0.30/-0.13	.004-.200 +.006/-.003 .201-.421 +.008/-.004 .422-.703 +.010/-.005 .704-.999 +.012/-.005

SIM TO .

COPIED FROM .

THIRD ANGLE PROJECTION

THIS DOCUMENT IS THE PROPERTY OF CUMMINS POWER GENERATION. IT CONTAINS PROPRIETARY AND CONFIDENTIAL INFORMATION WHICH MUST NOT BE DUPLICATED, USED OR DISCLOSED UNDER THIS EXPRESSLY AUTHORIZED BY CUMMINS POWER GENERATION OR IT'S REPRESENTATIVE

ITEM	PART NO	DWG SIZE	DESCRIPTION OR MATERIAL	REF DES

	NAME	DATE
DR	G_COLLEEN	08-17-98
CHKR MFG	S_JULIK	08-18-98
APPROVED	T_LOEHLEIN	08-18-98

FOR INTERPRETATION OF DIMENSIONS AND TOLERANCING, SEE ANSI Y14.5M-1982

MODEL FIRST USED ON DG__/GG__

CUMMINS POWER GENERATION
1400 73RD AVE NE
MINNEAPOLIS, MINNESOTA 55432

TITLE OUTLINE-CKT_BRKR .

SITE CODE PGA

DWG NO 0500_3278

SHEET 2 of 3

DWG SIZE D

0500_3278 | D | Pro/ENGINEER | METRIC DWG

REL NO	LTR	NO	REVISION	ZONE	DR	CHKR	APPROVED	DATE
ECO-106305	P	-	----	-	SGC	DPA	K.KISHORE	14AUG09

UL/IEC LUGS						ACCESSORY SPECIFICATIONS			
LUG	FRAME	MAX AMPS	WIRE RANGE COPPER	DIM B	DIM C	ACCESSORY DESCRIPTION	CONTACT RATING	INRUSH CURRENT	CONNECTION TYPE
	NSF 600/690V	15-60A	#14-10 AWG (SOLID COND. ONLY)	383 [15]	105 [4.1]	12 VDC SHUNT TRIP	-	10A 4	COMPRESSION TERMINALS #20-16 AWG OR SMALLER TORQUE: 10 LB-IN
		70-250A	2/0-250 KCMIL			1 EA. FORM C 1 AUX CONTACT + 1 TRIP ALARM	6A AT 690 VAC 2.5A AT 48 VDC, 0.3A AT 250 VDC	-	
	NSJ 600/690V	400A 3 OR 4 POLE	#2-600 KCMIL	329 [13]	176 [6.9]	12 VDC SHUNT TRIP	-	10A 4	COMPRESSION TERMINALS #20-16 AWG OR SMALLER TORQUE: 10 LB-IN
		600A 3-POLE 630A 4-POLE	2/0-350 KCMIL			1 EA. FORM C 1 AUX CONTACT + 1 TRIP ALARM	6A AT 690 VAC 2.5A AT 48 VDC, 0.3A AT 250 VDC	-	
	CK 600/660V	800A 3-POLE 800A 4-POLE 1200A 3-POLE 1250A 4-POLE	3/0-500 KCMIL	382 [15]	230 [9]	12 VDC SHUNT TRIP	-	3.8A 3	COMPRESSION TERMINALS FOR 1 OR 2 #18-14 AWG. TORQUE: 12 LB-IN
						1 EA. FORM C 1 AUX CONTACT + 1 TRIP ALARM	5A AT 480 VAC, 3A AT 600 VAC 0.5A AT 125VDC, 0.25A AT 250VDC	-	
	KDL 240V	250A	#3-250 KCMIL	374 [14.7]	105 [4.1]	NONE AVAILABLE			
	QDL 240V	250A	#4-300 KCMIL	374 [14.7]	81 [3.2]	NONE AVAILABLE			
	Q4 240V	400A	#1-600 KCMIL	315 [12.4]	176 [6.9]	NONE AVAILABLE			
7	P	800A 3-POLE	3/0-500 KCMIL	448 [17.6]	177 [7]	12 VDC SHUNT TRIP	-	200VA 5	COMPRESSION TERMINALS FOR 1 OR 2 #18-16 AWG. TORQUE: 10 LB-IN
						1 EA. FORM C 4 AUX CONTACTS + 1 TRIP ALARM	6A AT 240 VAC, 6A AT 480 VAC, 3A AT 600 VAC, 2.5A AT 48 VDC, 0.8A AT 125 VDC, 0.3A AT 250 VDC	-	
8	P	1200A 3-POLE	3/0-500 KCMIL	407 [16] 6	220 [8.7] 6	12 VDC SHUNT TRIP	-	200VA 5	COMPRESSION TERMINALS FOR 1 OR 2 #18-16 AWG. TORQUE: 10 LB-IN
						1 EA. FORM C 4 AUX CONTACTS + 1 TRIP ALARM	6A AT 240 VAC, 6A AT 480 VAC, 3A AT 600 VAC, 2.5A AT 48 VDC, 0.8A AT 125 VDC, 0.3A AT 250 VDC	-	
	H	15-150	(1) #14-3/0 AWG	393 [15.5]	95 [3.8]	12 VDC SHUNT TRIP	COIL BURDEN < 5W	10A	COMPRESSION TERMINALS #14-#10 AWG, 50 LB-IN #8-3/0, 120 LB-IN
	J	175	(1) 1/0-4/0 AWG	383 [15]	105 [4.1]	1 EA FORM C 1 AUX CONTACT + 1 TRIP ALARM	MIN LOAD = 10 ma WITH 24V DC: 48 2.5A, 125 0.8A, 250 0.3A; AC: 240 6.0A, 480 6.0A, 600 3.0A	-	COMPRESSION TERMINALS 3/0-350 KCMIL 225 LB-IN
		200-250	(1) 3/0-350 kcmil						

ITEM	PART NO	REQ	DESCRIPTION OR MATERIAL	REV

DO NOT SCALE PRINT

TOLERANCE UNLESS OTHERWISE SPECIFIED

	mm	Inch
X	± 1	± .1
.X	± 0.8	± .03
.XX	± 0.38	±.015±

ANG TOL± 1.0	0.00-4.99	+0.15/-0.00	.004-.200	+.006/-.003
	5.00-9.99	+0.20/-0.10	.201-.421	+.008/-.004
DRAWN TO SCALE OF 5/32	10.00-17.49	+0.25/-0.13	.422-.703	+.010/-.005
	17.50-24.99	+0.30/-0.15	.704-.999	+.012/-.005

CAN TO . | COPIED FROM . | THIRD ANGLE PROJECTION

THIS DOCUMENT IS THE PROPERTY OF CUMMINS POWER GENERATION. IT CONTAINS CONFIDENTIAL AND PROPRIETARY INFORMATION WHICH MUST BE KEPT CONFIDENTIAL. REPRODUCTION OR DISCLOSURE TO THIRD PARTIES WITHOUT THE EXPRESS WRITTEN AUTHORITY OF CUMMINS POWER GENERATION IS IT'S REPRESENTATIVE.

MODEL FIRST USED ON: DG__/GG__

FOR INTERPRETATION OF DIMENSIONS, TOLERANCES AND SYMBOLS USE ASME Y14.5M-1982

	NAME	DATE
DR	G.COLLEEN	08-17-98
CHKR ☐ MFG ☐	S.JULIK	08-18-98
APPROVED	T.LOEHLEIN	08-18-98

SITE CODE: PGA

CUMMINS POWER GENERATION
1400 73RD AVE NE
MINNEAPOLIS, MINNESOTA 55432

TITLE: OUTLINE-CKT_BRKR .

DWG NO: 0500_3278 | SHEET 3 OF 3 | REV D

Pro/ENGINEER

0500_4087

REL NO	LTR	NO	REVISION	DRN	CKD	APVD	DATE
ECO-109850	L	-	-----	JR	KK	KISHORE	22APR10

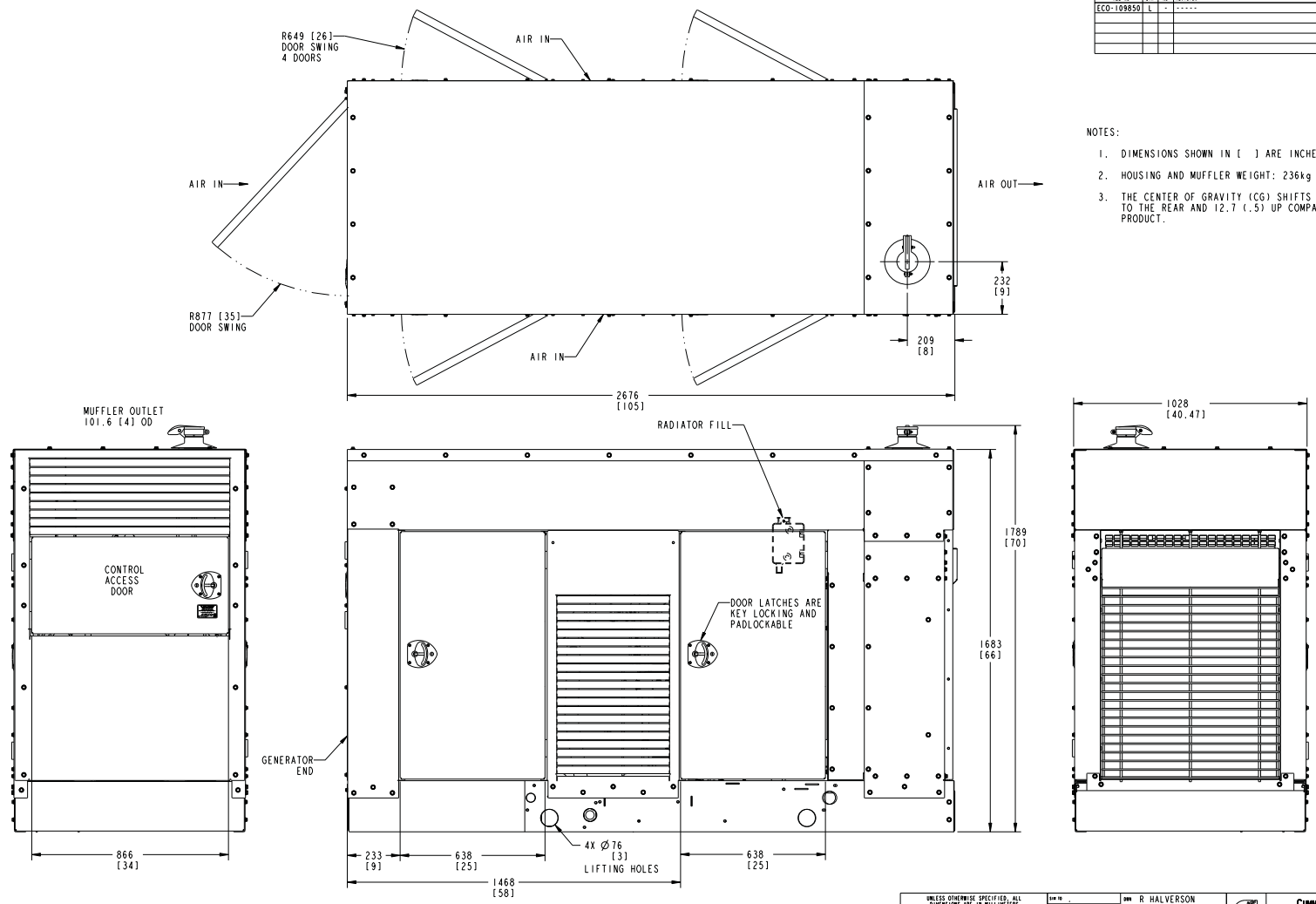

NOTES:

1. DIMENSIONS SHOWN IN [ ] ARE INCHES.
2. HOUSING AND MUFFLER WEIGHT: 236kg (520lbs)
3. THE CENTER OF GRAVITY (CG) SHIFTS APPROXIMATLY 25.4 (1) TO THE REAR AND 12.7 (.5) UP COMPARED TO THE UNHOUSED PRODUCT.

WEATHER HOUSING W/MUFFLER
(F182)

UNLESS OTHERWISE SPECIFIED, ALL DIMENSIONS ARE IN MILLIMETERS

DIM		HOLE
X	± 1	0.00- 4.99 +0.15/-0.08
.X	± 0.8	5.00- 9.99 +0.20/-0.10
.XX	± 0.38	10.00-17.49 +0.25/-0.13
		17.50-24.99 +0.30/-0.13

ANG TOL: ± 1.0° SCALE: 1/8

DO NOT SCALE PRINT

CONFIDENTIAL
PROPERTY OF CUMMINS POWER GENERATION GROUP

DRN R HALVERSON
CKD E KROHNFELDT
APVD E KROHNFELDT
DATE 07-27-04

FOR INTERPRETATION OF DIMENSIONS AND TOLERANCING, REF ASME Y14.5M-1994

FIRST USED ON GGHH

SITE CODE PGA

CUMMINS POWER GENERATION

GENSET OUTLINE

SIZE D 0500_4087 SHEET 3 of 9 REV L

Drawing Name: 0500-4087 Revision: L
Part Name: 0500-4087 Revision: L
Sheet 3 of 10

NRG
Intelligent Engine Start Battery Charger

The Smart Choice for Mission-Critical Engine Starting

- **Fast, accurate, mission-critical charging** – gives best starting reliability
- **Replace nearly any charger** – without planning ahead
- **Industry-first battery-fault alarm -** helps dispatch service early
- **1 million hour observed MTBF** – means longest charger life
- **Smart design** – stops load dump and other damaging transients

www.sens-usa.com • info@sens-usa.com • Toll-free 866.736.7872 • 303.678.7500

ISO 9000 c UL us LISTED CE

SENS®
Our energy means business®

NRG Battery Charger Benefits and Features

Failure to start due to battery problems is the leading cause of inoperable engine generator sets.

SENS NRG battery charger maximizes starting system reliability while slashing genset servicing costs:

One NRG replaces almost any charger without extra site visits. Installers can select or change at any time 120, 208 or 240 volts AC input, 12 or 24-volt battery and output settings optimized for nearly any lead-acid or nickel cadmium battery.

Easy to understand user interface provides state-of-the-art system status – including digital metering, NFPA 110 alarms and a battery fault alarm that can send service personnel to the site before failure to start.

Batteries charged by NRG give higher performance and last longer. In uncontrolled environments precision charging by SENS increases battery life and watering intervals 400% or more.

NRG meets all relevant industry standards – including UL, NFPA 110 and CE. All units are either C-UL listed or C-UL recognized. 50/60 Hz units add CE marking to UL agency marks.

***EnerGenius* reliability technology built into every charger includes:**
- All-electronic operation with generous component de-rating
- Disconnected/reversed/incorrect voltage battery alarm and protection
- Protection of connected equipment against load dump transients
- Widest temperature rating, and overtemperature protection
- Superior lightning and voltage transient protection
- Demonstrated field MTBF > 1 million hours
- Standard 3-year warranty and available reimbursement of customer field service costs

Earn the best return on your charger investment – choose SENS NRG

NRG Specifications

AC Input

Voltage	110-120/208-240 VAC, ±10%, single phase, switch selectable
Input current	10A charger: 6.6/3.3 amps maximum
	20A charger: 12.6/6.3 amps maximum
Frequency	60 Hz ±5% standard; 50/60 Hz ±5% optional
Input protection	1-pole fuse, soft-start, transient suppression

Charger Output

Nominal voltage ratings	12 or 24 volt nominal
Optional voltage rating	12/24 volt, field selectable
Battery settings	Six discrete battery voltage programs
	- Low or high S.G. flooded
	- Low or high S.G. VRLA
	- Nickel cadmium 9, 10, 18, 19 or 20 cells
Regulation	±0.5% (1/2%) line and load regulation
Current	10 or 20 amps nominal
Electronic current limit	105% rated output typical – no crank disconnect required
Charge characteristic	Constant voltage, current limited, 4-rate automatic equalization
Temperature compensation	Enable or disable anytime, remote sensor optional
Output protection	Current limit, 1-pole fuse, transient suppression

Standard 4-rate charging

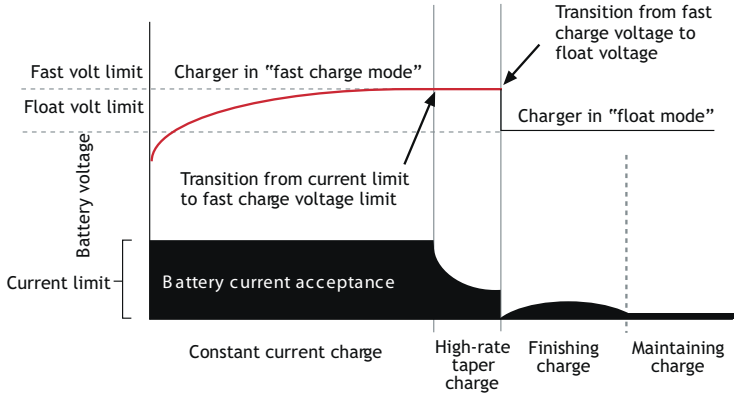

User Interface, Indication and Alarms

Digital meter	Switch-selectable meter for output volts, amps
Accuracy	±2% volts, ±5% amps
Alarms	LED and Form C contact(s) per table:

Front panel status display

Alarm System Functions

	Alarm code "1"[1]	Alarm code "C" (meets requirements of NFPA 110)
AC good	LED	LED
Float mode	LED	LED
Fast charge	LED	LED
Temp comp active	LED	LED
AC fail	LED[2]	LED and Form C contact
Low battery volts		LED and Form C contact
High battery volts		LED and Form C contact
Charger fail	LED[2]	LED and Form C contact
Battery fault[3]	LED[2]	LED and Form C contact

1. Alarms "1" available only on 10A charger
2. Form C contact provides summary alarm of these conditions. BBHH chargers include this alarm configuration. Contacts rated 2A @ 26 VDC resistive
3. Battery fault alarm indicates these fault conditions:
   - Battery disconnected - Battery polarity reversed - Mismatched charger battery voltage - Open or high resistance charger to battery connection - Open battery cell or excessive internal resistance

Controls

AC input voltage select	Field-selectable switch
Optional 12/24-volt output select	Field-selectable two-position jumper
Battery program select	Field-selectable six-position jumper
Fast charger enable/disable	Field-selectable two-position jumper
Temp compensation enable	Standard. Can be disabled or re-enabled in the field
Remote temp comp enable	Connect optional remote sensor to temp comp port

Simple field adjustments

Environmental

Operating temperature	-20C to +60C, meets full specification to +45C
Over temperature protection	Gradual current reduction to maintain safe power device temperature
Humidity	5% to 95%, non-condensing
Vibration (10A unit)	UL 991 Class B (2G sinusoidal)
Transient immunity	ANSI/IEEE C62.41, Cat. B, EN50082-2 heavy industrial

Agency Standards

Safety	C-UL listed to UL 1236 (required for UL 2200 gensets), CSA standard 22.2 no. 107.2-M89 CE: 50/60 Hz units DOC to EN 60335
Agency marking	60 Hz: C-UL-US listed 50/60 Hz: C-UL-US listed plus CE marked
EMI	FCC Part 15 Class B; EN 50081-2
NFPA standards	NFPA 70, NFPA 110. (NFPA 110 requires Alarms "C")
Optional agency compliance	Units with Alarms "1" configuration available with additional compliance to UL category BBHH and NFPA 20

Construction

Housing/configuration	Material: Heavy clear anodized aluminum. Configuration options: • Fully enclosed: C-UL listed enclosure • Open frame: C-UL recognized • Slimline: C-UL recognized open frame construction with remote isolation transformer
Packaging	Open-frame and Slimline configurations only available in bulk OEM quantities and packaging
Dimensions	See Drawings and Dimensions page for details
Printed circuit card	Surface mount technology, conformal coated
Cooling	Natural convection
Protection degree	Listed housing: NEMA-1 (IP20). Optional NEMA 3R enclosure
Damage prevention	Fully recessed display and controls
Electrical connections	Compression terminal blocks

Warranty

Standard warranty	Three year parts and labor warranty from date of shipment
Optional warranty	If specified at time of order, warranty coverage is increased to reimburse customer's documented field service costs up to the original charger price. Contact the factory for full details

Optional features

Input	Input frequency, 50/60 Hz
Remote temp comp sensor	Recommended where battery and charger are in different locations
Drip shield	Protects from dripping water
NEMA 3R housing	Enables outdoor installation (remote temp sensor recommended)
UL BBHH listing	Available in 10A units with Alarms "1"
Field service warranty	Reimbursement of customer field service expenses up to charger price

Drawings and Dimensions

10A Chargers
Enclosed and Open Frame Configurations

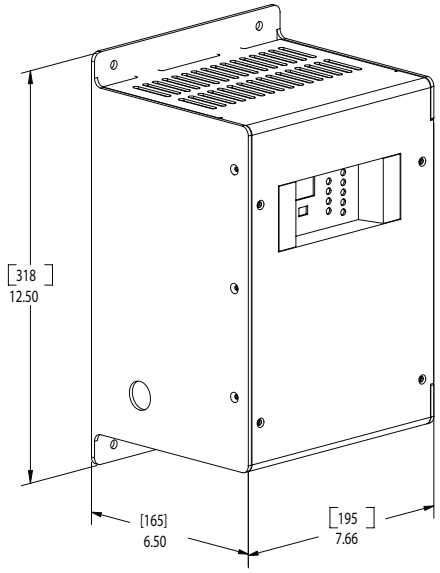

Open-frame configuration omits front cover

10A Chargers
Slimline Open Frame Configuration

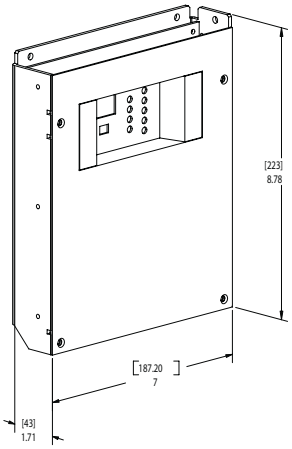

Slimline can be mounted either flat or edgewise

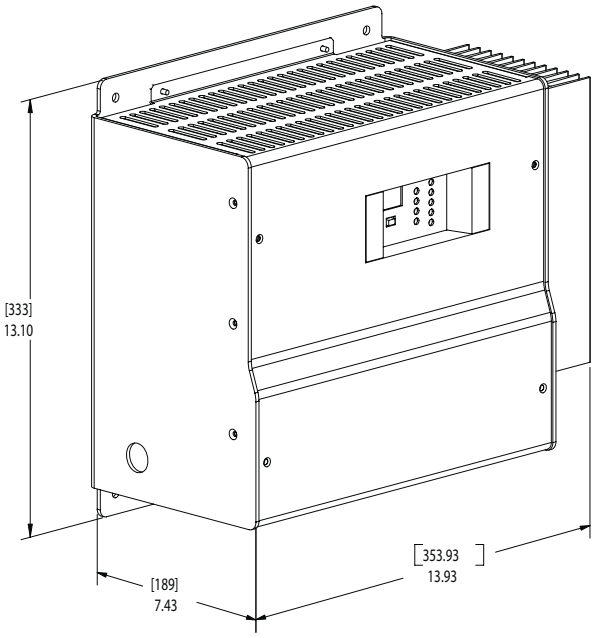

Open-frame configuration omits front cover

20A Chargers
Enclosed and Open Frame Configurations

Housing Dimensions Table

Amps	Configuration	Width	Depth	Height
10	Enclosed	7.66" (195 mm)	6.50" (165 mm)	12.50" (318 mm)
10	Open-frame	7.66" (195 mm)	6.50" (165 mm)	12.50" (318 mm)
10	Slimline – flat mount	7.00" (187 mm)	1.71" (43 mm)	8.78" (223 mm)
10	Slimline – edge mount	1.71" (43 mm)	7.00" (187 mm)	8.78" (223 mm)
20	Enclosed	13.93" (354 mm)	7.43" (189 mm)	13.10" (333 mm)
20	Open-frame	13.93" (354 mm)	7.43" (189 mm)	13.10" (333 mm)

111009 B

NRG Ordering Information

Output volts	Output amps	Model	Available configurations	NFPA 110 Alarms	Lbs/Kg
12	10	NRG12-10-R1	Enclosed, Open-frame, Slimline	No	19 / 8.7
12	10	NRG12-10-RC	Enclosed, Slimline	Yes	19 / 8.7
24	10	NRG24-10-R1	Enclosed, Open-frame, Slimline	No	24 / 10.9
24	10	NRG24-10-RC	Enclosed, Slimline	Yes	24 / 10.9
12/24	10	NRG22-10-R1	Enclosed, Open-frame, Slimline	No	24 / 10.9
12/24	10	NRG22-10-RC	Enclosed, Slimline	Yes	24 / 10.9
12	20	NRG12-20-RC	Enclosed, Open-frame	Yes	39 / 17.7
24	20	NRG24-20-RC	Enclosed, Open-frame	Yes	42 / 19.1
12/24	20	NRG22-20-RC	Enclosed, Open-frame	Yes	42 / 19.1

All models offer field-selectable input 120/208-240 volts. 60 Hz input is standard with C-UL listing. Optional 50/60 Hz input includes C-UL listing and adds CE mark.

Model Number Breakout

NRG ☐☐ – ☐☐ – ☐☐☐☐

Model

Output voltage
- 12: 12 volts
- 24: 24 volts
- 22: 12/24-volt field selectable

Output current
- 10: 10 amps
- 20: 20 amps

AC input
- R: 120/208-240 VAC, 60 Hz
- H: 120/208-240 VAC, 50/60 Hz

Alarm system code
- 1: LED and single Form C contact
- C: LEDs and Form C contacts to meet NFPA 110

Housing/Agency
- L: Enclosed: C-UL listed
- R: Open-frame: C-UL recognized
- S: Slimline open-frame: C-UL recognized (10A only)

UL category code
- S: UL category BBGQ (standard)
- H: UL category BBHH (Alarms "1" only)

The Smart Choice for Mission-Critical Engine Starting

Additional Information

Contact SENS or your local sales representative for additional specification, engineering and installation information

ISO 9000 c UL US LISTED CE

Contact Information

For information and service on any SENS product, please contact us at:
Sales 1.866.736.7872 • 303.678.7500 • Fax 303.678.7504
www.sens-usa.com • info@sens-usa.com
1840 Industrial Circle, Longmont, CO 80501 USA

SENS®
STORED ENERGY SYSTEMS
Our energy means business®

Warranty Statement

Our energy working for you.™

Cummins Power Generation

Global Commercial Warranty Statement

Commercial Generating Set

Our energy working for you.™

Cummins Power Generation®

Limited Warranty

Commercial Generating Set

This limited warranty applies to all Cummins Power Generation® branded commercial generating sets and associated accessories (hereinafter referred to as "Product").

This warranty covers any failures of the Product, under normal use and service, which result from a defect in material or factory workmanship.

Warranty Period:

The warranty start date† is the date of initial start up, first rental, demonstration or 18 months after factory ship date, whichever is sooner. See table for details.

Continuous Power (COP) is defined as being the maximum power which the generating set is capable of delivering continuously whilst supplying a constant electrical load when operated for an unlimited number of hours per year. No overload capability is available for this rating.

Prime Power (PRP) is defined as being the maximum power which a generating set is capable of delivering continuously whilst supplying a variable electrical load when operated for an unlimited number of hours per year. The permissible average power output over 24 hours of operation shall not exceed 70% of the PRP. For applications requiring permissible average output higher than stated, a COP rating should be used.

Limited-Time Running Power (LTP) is defined as the maximum power available, under the agreed operating conditions, for which the generating set is capable of delivering for up to 500 hours of operation per year.

Emergency Standby Power (ESP) is defined as the maximum power available during a variable electrical power sequence, under the stated operating conditions, for which a generating set is capable of delivering in the event of a utility power outage or under test conditions for up to 200 hours of operation per year. The permissible average power output over 24 hours of operation shall not exceed 70% of the ESP.

Base Warranty Coverage Duration (Whichever occurs first)

Rating	Months	Max. Hours
COP	12	Unlimited
PRP	12	Unlimited
LTP	12	500 hrs
ESP	24	400 hrs

† Warranty start date for designated rental and oil and gas model Products is determined to be date of receipt of Product by the end customer.

Cummins Power Generation® Responsibilities:

In the event of a failure of the Product during the warranty period due to defects in material or workmanship, Cummins Power Generation® will only be responsible for the following costs:

- All parts and labor required to repair the Product.
- Reasonable travel expenses to and from the Product site location.
- Maintenance items that are contaminated or damaged by a warrantable failure.

Owner Responsibilities:

The owner will be responsible for the following:

- Notifying Cummins Power Generation® distributor or dealer within 30 days of the discovery of failure.
- Installing, operating, commissioning and maintaining the Product in accordance with Cummins Power Generation®'s published policies and guidelines.
- Providing evidence for date of commissioning.
- Providing sufficient access to and reasonable ability to remove the Product from the installation in the event of a warrantable failure.

In addition, the owner will be responsible for:

- Incremental costs and expenses associated with Product removal and reinstallation resulting from non-standard installations.
- Costs associated with rental of generating sets used to replace the Product being repaired.

- Costs associated with labor overtime and premium shipping requested by the owner.
- All downtime expenses, fines, all applicable taxes, and other losses resulting from a warrantable failure.

Limitations:

This limited warranty does not cover Product failures resulting from:

- Inappropriate use relative to designated power rating.
- Inappropriate use relative to application guidelines.
- Normal wear and tear.
- Improper and/or unauthorized installation.
- Negligence, accidents or misuse.
- Lack of maintenance or unauthorized repair.
- Noncompliance with any Cummins Power Generation® published guideline or policy.
- Use of improper or contaminated fuels, coolants or lubricants.
- Improper storage before and after commissioning.
- Owner's delay in making Product available after notification of potential Product problem.
- Use of steel enclosures within 60 miles of the coast of salt water when aluminum or an alternate non-corrosive material enclosure option is available.
- Replacement parts and accessories not authorized by Cummins Power Generation®.
- Use of Battle Short Mode.
- Owner or operator abuse or neglect such as: operation without adequate coolant or lubricants; overfueling; overspeeding; lack of maintenance to lubricating, cooling or air intake systems; late servicing and maintenance; improper storage, starting, warm-up, run-in or shutdown practices, or for progressive damage resulting from a defective shutdown or warning device.
- Damage to parts, fixtures, housings, attachments and accessory items that are not part of the generating set.

This limited warranty does not cover costs resulting from:

- Difficulty in gaining access to the Product.
- Repair of cosmetic damage to enclosures.

Please contact your local Cummins Power Generation® Distributor for clarification concerning these limitations.

CUMMINS POWER GENERATION® RIGHT TO FAILED COMPONENTS:

Failed components claimed under warranty remain the property of Cummins Power Generation®. Cummins Power Generation® has the right to reclaim any failed component that has been replaced under warranty.

Extended Warranty:

Cummins Power Generation® offers several levels of Extended Warranty Coverage. Please contact your local Cummins Power Generation ® Distributor for details.

www.cumminspower.com

THE WARRANTIES SET FORTH HEREIN ARE THE SOLE WARRANTIES MADE BY CUMMINS POWER GENERATION ® IN REGARD TO THE PRODUCT. CUMMINS POWER GENERATION® MAKES NO OTHER WARRANTIES, EXPRESS OR IMPLIED, OR OF MERCHANTABILITY OR FITNESS FOR A PARTICULAR PURPOSE.

IN NO EVENT IS CUMMINS POWER GENERATION® LIABLE FOR INCIDENTAL OR CONSEQUENTIAL DAMAGES.

This limited warranty shall be enforced to the maximum extent permitted by applicable law. This limited warranty gives the owner specific rights that may vary from state to state or from jurisdiction to jurisdiction.

Product Model Number:_____

Product Serial Number:_____

Date in Service:_____